OMC

1966 SNOW CRUISER

Service Manual

OUTBOARD MARINE CORPORATION OF CANADA LTD.
PETERBOROUGH, CANADA

SECTION 1
INTRODUCTION

The snow machine has been designed and built for dependable, high performance. It is important to every snow machine owner to be able to receive skilled and thorough service for his vehicle when necessary. It is important to the service dealer to be able to offer the type of skilled service which will maintain the customer's satisfaction.

This manual has been designed to provide the serviceman with complete service information on the 1965 and 1966 snow machines. An effort has been made to produce a manual that will not only serve as a ready reference book for the experienced serviceman, but will also provide more basic information for the guidance of the less experienced man. This manual, together with the regularly issued service bulletins and Parts Catalogs, provide the serviceman with all the literature necessary to service the 1965 and 1966 snow machines.

The Parts Catalogs contain complete listings of the parts required for replacement. In addition, the exploded views illustrate the correct sequence and relationship of all parts. This catalog can be of considerable help as a reference during disassembly and reassembly.

The Section Index on the cover enables the reader to locate quickly any desired section. At the beginning of each Section is a Table of Contents which gives the page number on which each topic begins. This arrangement simplifies locating the desired information within this manual. All general information, including principles of operation, trouble shooting, and tune up procedures, are given in Sections 2 through 4 of this manual. Sections 5 through 9 provide fully illustrated, detailed, step-by-step disassembly and reassembly instructions and adjustment procedures. Section 10 provides maintenance information, including lubrication and preventive maintenance. Section 11 lists complete specifications on the 1965 and 1966 snow machines. In this way, the

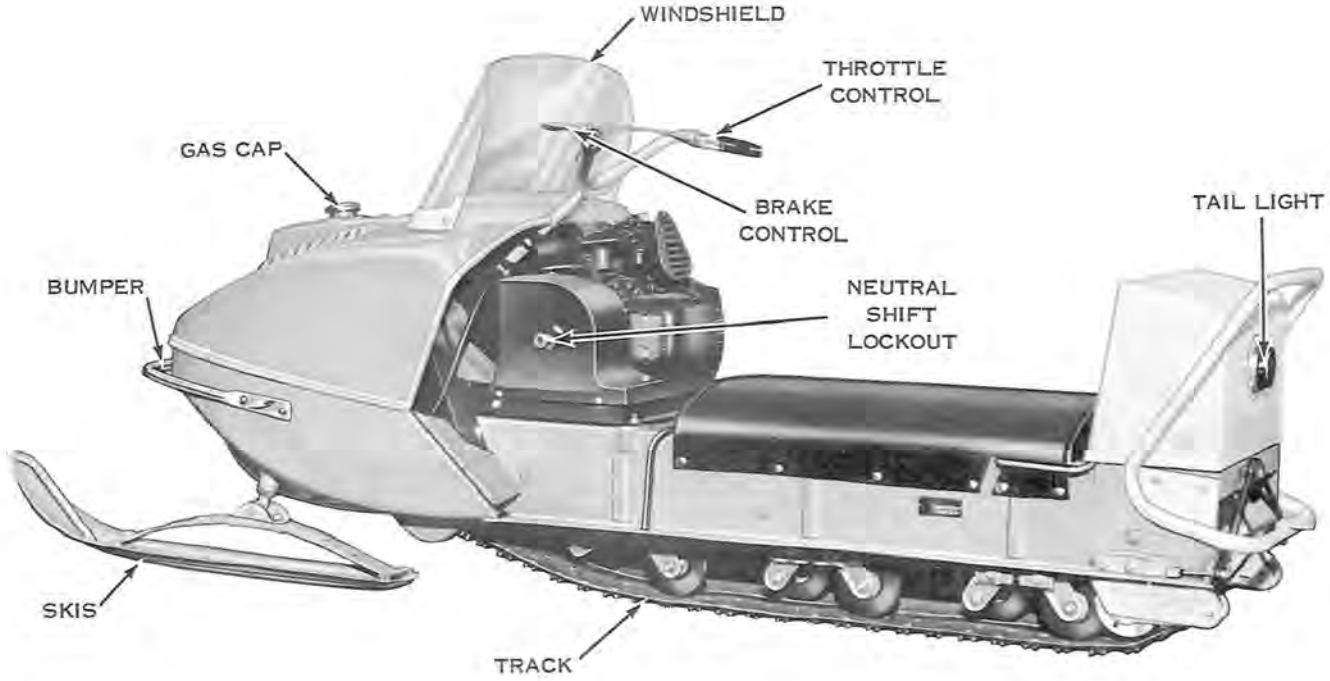

Figure 1-1

texts treats each topic separately; theory and practice are not intermixed. This makes it unnecessary for the experienced serviceman to reread discussions of theory along with specific service information. Marginal illustrations provide unimpeded reading of explanatory text, and permit close relationship between illustration and text.

Read this manual carefully to become thoroughly familiar with the procedures described, then keep it readily available in the service shop for use as a reference. If properly used, it will enable the serviceman to give better service to the snow machine owner, and thereby build or maintain a reputation for reliable service.

This service manual covers all phases of servicing the 1965 and 1966 snow machines, without reference to other information; however, new service situations sometimes arise. If a service question does not appear to be answered in this manual, you are invited to write to the Service Department for additional help. Always be sure to give complete information, including model number, vehicle serial number, and engine serial number.

All information, illustrations, and specifications contained in this literature are based on the product information available at the time of publication. The right is reserved to make changes at any time without notice.

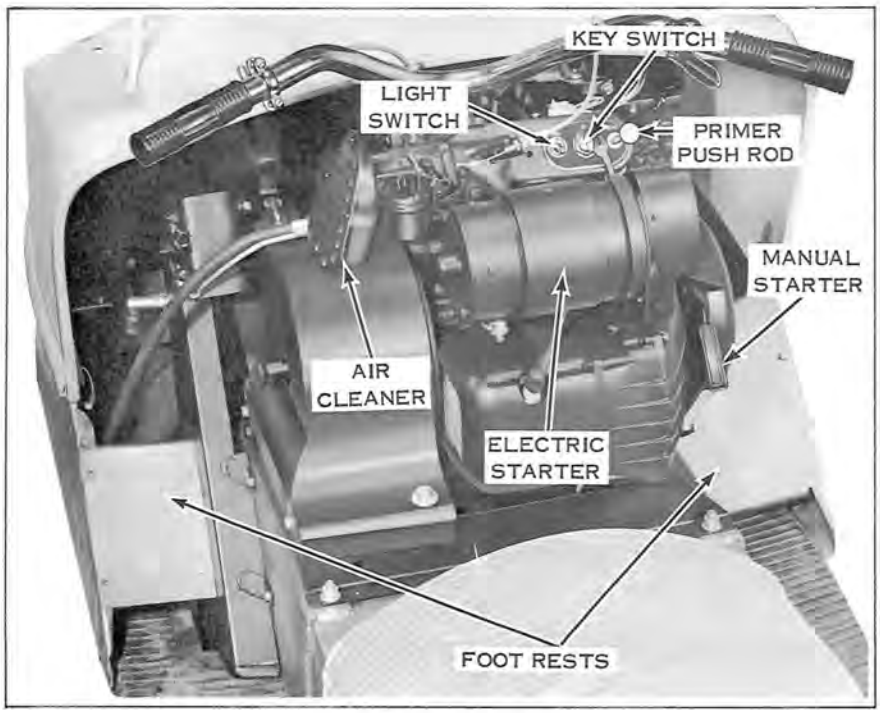

Figure 1-2

SECTION 2
GENERAL SERVICE INFORMATION

TABLE OF CONTENTS

TWO-CYCLE ENGINE OPERATION

An internal combustion engine is used to provide the power for propulsion. An internal combustion engine is one in which fuel is burned inside the engine: a charge of fuel is introduced into a firing chamber (cylinder) within the engine and ignited. The energy released by the expansion of the burning fuel is converted to torque by the piston, connecting rod, and crankshaft, and then transferred through the transmission to the drive track.

Internal combustion engines are classified as either four-cycle or two-cycle engines. The "four" and the "two" refers to the number of piston strokes required to complete a power cycle of intake, compression, power, and exhaust. A piston stroke is piston travel in one direction only; up is one stroke, down is another. In a four-cycle engine, two crankshaft revolutions, or four strokes, are required for each power cycle. In a two-cycle engine only one crankshaft revolution is required per power cycle (see Figure 2-1).

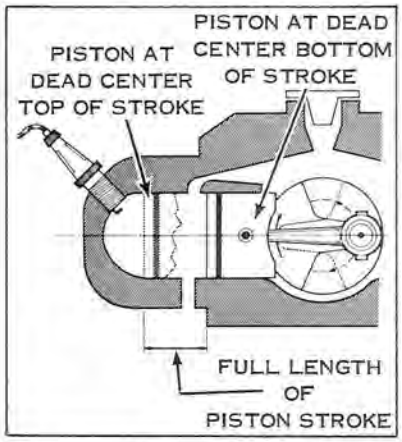

Figure 2-1

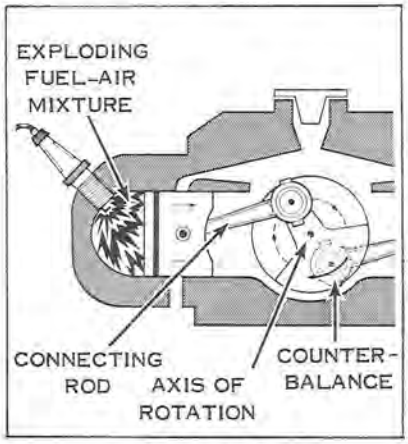

Figure 2-2

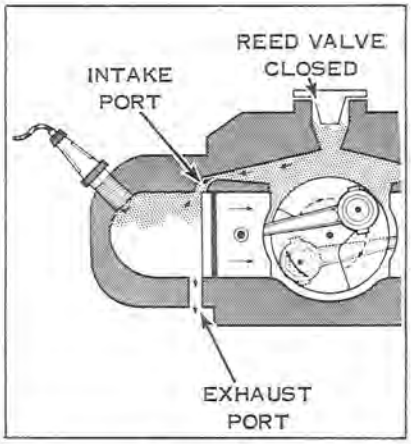

Figure 2-3

In a two-cycle engine, the ignition of the fuel-air mixture occurs as the piston reaches the top of each stroke. The explosion drives the piston downward (see Figure 2-2). Toward the end of the downward stroke, ports which lead from the cylinder to the exhaust system are uncovered. The expanding exhaust gases flow into these ports, reducing pressure in the cylinder (see Figure 2-3). Immediately after, intake ports are opened. These ports connect the cylinder with the crankcase where a mixture of fuel and air has been developed by carburetion (see Figure 2-4). The downward motion of the piston compresses this mixture and forces it through the intake ports into the cylinder.

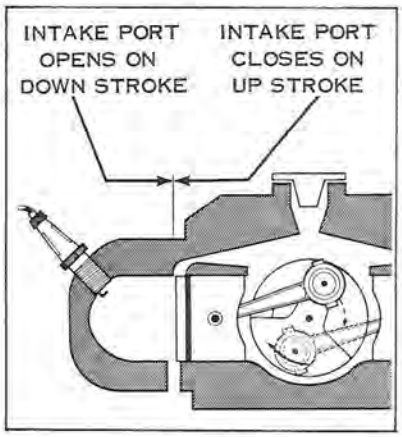

Figure 2-4

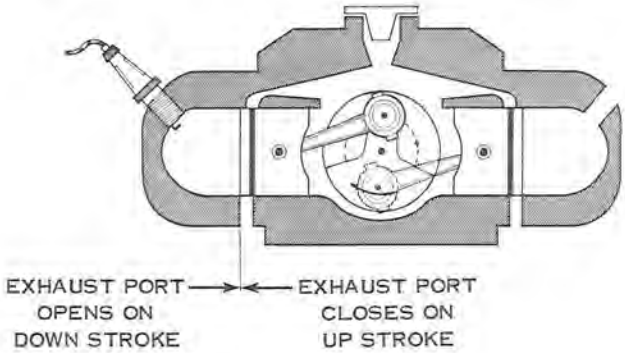

Figure 2-5

The inrushing charge of the fuel-air mixture helps to eject (scavenge) the last of the exhaust gases from the cylinder. At this point, the momentum of the flywheel is required to return the piston to the top of the cylinder. As the piston begins its up-stroke, it closes the intake and exhaust ports (see Figure 2-5) and begins to compress the fuel-air mixture trapped in the cylinder. The upward motion of the piston also reduces the pressure in the crankcase. The resulting crankcase suction opens reed valves which admit a fresh charge of air and fuel from the carburetor into the crankcase (see Figure 2-6), thus preparing for the next power cycle. Near the top of the piston stroke, the compressed fuel-air mixture is ignited, the piston is driven downward, and the power cycle is repeated. At full throttle, this cycle may be repeated more than four thousand times every minute.

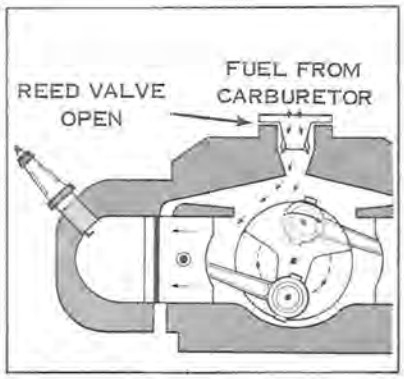

Figure 2-6

CARBURETION

The system which controls the intake of the fuel-air mixture in the two cycle engine consists of a set of reed valves which serve the same purpose as the intake valves on a four cycle engine. The reed valves are thin, flexible metal strips mounted between the carburetor intake manifold and crankcase.

When the piston is on the up-stroke, it creates a partial vacuum in the crankcase. Atmospheric pressure forces the reed away from the body (see Figure 2-7), opening the passage between the carburetor and crankcase. When the piston is on the down-stroke, it compresses the crankcase charge, forcing the reed against the passage opening, and sealing off the crankcase from the carburetor. Since the opening and closing may occur in excess of four thousand times per minute, the reed must be thin and flexible. In the snow machine engine, the reed does not have to seat exactly flush with the housing to permit normal operation.

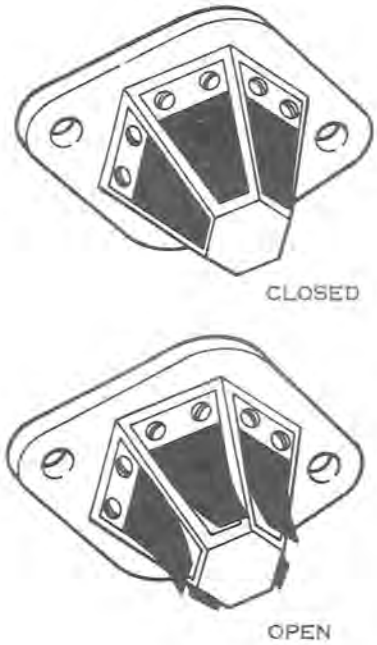

Figure 2-7

Gasoline, in its liquid state, burns relatively slowly with an even flame. However, when gasoline is combined with air to form a vapor, the mixture becomes highly inflammable and burns with an explosive effect. To obtain the sharpest, strongest explosion, the fuel and air must be correctly proportioned and thoroughly mixed. It is the function of the carburetor to accomplish this.

Gasoline vapor will burn when mixed with air in a proportion from 12:1 to 18:1 by weight. Mixtures of different proportions are required for different purposes. Idling requires a relatively rich mixture; a leaner mixture is desirable for maximum economy under normal load conditions; high speeds require a rich mixture for maximum power. The carburetor is designed to deliver the correct proportion of fuel and air to the engine for these various conditions.

The carburetor is essentially a simple metering device. The float chamber holds a limited quantity of fuel, regulated by a float valve. Needle valves permit a precise amount of fuel to flow from the float chamber to the carburetor throat. The upstroke of the piston creates a suction which draws air through the reed valves and the carburetor throat. At a particular point the throat is restricted by a venturi (see Figure 2-8). The venturi has the effect of reducing air pressure in the air stream, creating a partial vacuum which draws fuel from the jet nozzles. As it is rushed along to the firing chamber, the fuel is swirled about in the air stream and vaporized.

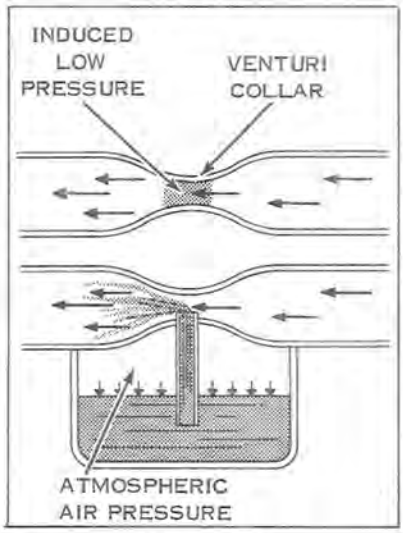

Figure 2-8

A shutter or butterfly valve in the throat regulates the amount of air drawn through the carburetor. To vary the speed of the engine, the throttle shutter opens or closes, regulating the amount of fuel-air mixture drawn into the engine.

A richer fuel mixture is required for starting a cold engine. A second shutter, called a choke, is placed into the throat forward of the jets, to restrict the flow of air. When shutter is closed, more gasoline flows into the air stream, resulting in a richer fuel mixture. When normal operating temperature is reached, the choke is opened and the standard ratio of gasoline and air is allowed to flow through the carburetor.

IGNITION

The ignition system provides a high voltage electric current which causes a spark to jump the spark plug gap within the cylinder and thus ignite the compressed fuel-air mixture in the cylinder. The ignition system consists of the magneto drive coils, breaker points, and condenser, and the ignition coil assemblies. A permanent magnet built into the flywheel revolves around the magneto drive coils. As the magnet moves past the coils, the direction of the magnetic flux through the coil is changed from one direction to the other (see Figure 2-9). Self-inductance of the magneto drive coil circuit, completed through the breaker points, prevents the flux in the coil laminations from changing until the breaker points open. When the points open, the flux changes direction very rapidly, inducing a high current in the coil which flows through the ignition coil primary windings. The ignition coils transform this current to a very high voltage which is sufficient to discharge across the spark plug gap.

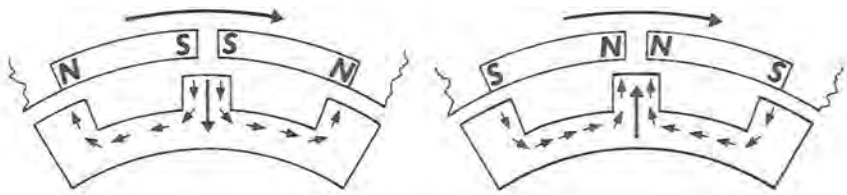

Figure 2-9

The lighting system coils produce alternating current which changes in frequency and voltage in proportion to the engine speed. On models having electric starting, this alternating current output is converted to direct current by a diode bridge rectifier and used to charge the battery. Direct current from the battery is then used to power the headlight and taillight, and the electric starter motor.

POWER FLOW

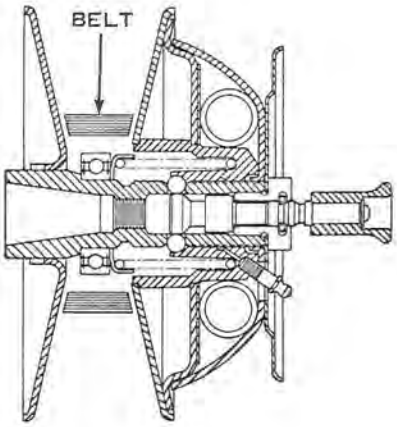

Figure 2-10

The transmission assembly transmits power from the engine to the front axle which propels the vehicle along the track. The primary sheave assembly is attached directly to the crankshaft. The secondary sheave assembly has its own mounting pedestal and is larger in diameter than the primary sheave assembly. The two are connected by a drive belt.

The primary sheave is centrifugally operated and engages when the engine speed reaches approximately 2000 rpm. When the engine is rotating at idle speed or below 2000 rpm, the drive belt rides on a ball bearing between the halves of the primary sheave assembly (see Figure 2-10). The primary sheave assembly halves are separated by a helical spring at the hub of the movable pulley half.

As the engine speed increases, centrifugal effect forces three balls (1965) or a garter spring (1966) in the end cap outward against the contour of the end cap and axially against the movable pulley half. As the sheaves are brought together the drive belt is forced outward to

ride on a larger diameter of the primary sheave assembly, increasing belt speed (see Figure 2-11). Since the belt length remains constant, the secondary sheave halves spread apart, allowing the belt to ride on a smaller diameter. In this way, the engine transmits power through a variable ratio, presenting the engine with a mechanical advantage most favorable for the speed at which it is operating.

A neutral shift mechanism may be used to prevent the drive from engaging during the warm-up period and idle. When the neutral shift plunger is pulled out, a cone on the end of the plunger raises two balls through the splines of the primary sheave assembly and into the path of the movable pulley half, preventing it from engaging the belt. The neutral shift can be engaged only when the engine is at idling speed.

Power is transmitted from the secondary sheave assembly through a drive chain to the front axle (ratio: 1965, 14:49; 1966, 16:49). The overall ratio from the crankshaft of the engine to the front axle is thus variable from 3:1 to 1:10, approximately.

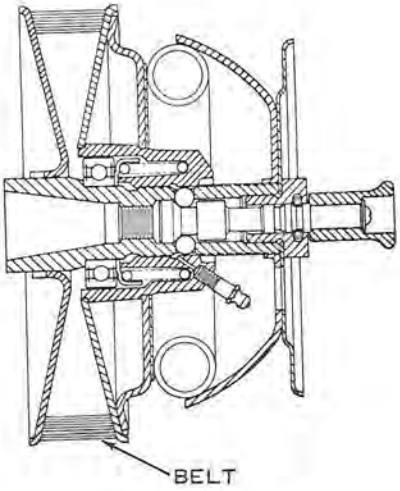

Figure 2-11

SECTION 3
TROUBLE SHOOTING

TABLE OF CONTENTS

DESCRIPTION

This section provides trouble shooting procedures for the snow machine. Steps to be followed in determining causes of unsatisfactory performance are outlined. A Trouble Check Chart at the end of this section lists causes of unsatisfactory performance.

Being able to locate the cause of trouble in an improperly operating snow machine is as important as being able to correct the trouble. A systematic approach to trouble shooting is important if the trouble is to be located and identified in minimum time.

Any service operation can be broken down into three steps:

1. Identifying the problem

2. Determining the cause of the problem, and

3. Correcting the problem.

Familiarity with the factors which affect two-cycle engine performance is important in making a correct service diagnosis. Factors which affect engine performance include the quality of the fuel and fuel mixtures, compression, spark and spark plug operation, and proper drive system adjustment. This section discusses compression and spark plugs and their relation to performance. A complete discussion of fuel mixtures is included in Section 10. Familiarity with factors which contribute to abnormal performance of an engine are similarly helpful. The skilled mechanic's experience is a great asset here. The Trouble Check Chart at the end of this section will assist in tracing symptoms of trouble to the source.

COMPRESSION

The pistons and piston rings perform two functions. They compress the mixture of fuel and air in the cylinders before ignition, and receive the force of the power explosion after ignition. For maximum compression, the cylinder must be round and the piston and piston rings correctly fitted to it. The rings must be properly seated in the ring grooves and free to expand against the walls of the cylinders. The rings will not retain the force of combustion if the pistons and cylinder walls are excessively worn, scored, or otherwise damaged, or if the rings become stuck in grooves because of carbon accumulation. Escape of compression past the piston rings is referred to as "blow-by" and is indicated by discoloration or carbon formation on the piston skirt.

Cylinder bores normally wear with operation of the engine. The degree of wear will vary with length of operation, efficiency of lubrication, and general condition of the engine. Excessive cylinder wear results in loose fitting pistons and rings, causing blow-by, loss of compression, loss of power and inefficient performance.

Piston rings are formed in such a manner that when installed on the piston, they bear against the cylinder wall with a light, even pressure. Excessive ring pressure against the cylinder wall increases friction, causing high operating temperature, sluggish performance, and abnormal wear or scoring. Insufficient pressure allows blow-by, which reduces power, and causes overheating and carbon formation on the piston skirt.

Since the ring tends to flex as it follows the cylinder contour during engine operation, clearance or gap must be provided between the ring

ends to prevent butting. The ring gap also allows the ring to expand (elongate) as engine temperature rises during operation. Insufficient gap clearance will cause the ring to bend or warp as it flexes and expands; excessive gap clearance will permit loss of compression.

Compression leakage may also occur at the spark plugs. A cracked spark plug insulator will cause similar trouble. Although compression is primarily dependent on the piston, rings, and cylinder, these other sources of leakage should be investigated when compression loss is noted.

Compression may also be affected by the fuel induction and exhaust systems. Since the fuel vapor is first compressed in the crankcase, leakage here will affect motor performance. Possible trouble spots include reed valve assemblies, seals between crankcase halves, and crankshaft bearing seals. Exhaust ports which have become clogged because of excessive deposits of carbon will hinder the efficient transfer of exhaust gases.

Excessive carbon build-up on piston heads or elsewhere in the cylinder walls reduces the amount of fuel mixture which can be handled by the engine, resulting in a loss of power.

Following the trouble check chart provided at the end of this section and the recommended tune-up procedures given in Section 4 will assure that all areas affecting fuel induction, compression, and exhaust will be considered as part of every trouble shooting procedure. An engine with low or uneven compression can not be successfully tuned for peak performance. It is essential that improper compression be corrected before proceeding with an engine tune-up.

SPARK PLUGS

The spark plug provides a gap inside the combustion chamber across which the high voltage from the ignition coil can be discharged. The resulting spark ignites the compressed mixture of fuel vapor and air in the cylinder.

Spark plugs are made in a number of heat ranges to satisfy a variety of operating conditions. The heat range of a spark plug refers to its ability to dissipate heat from its firing end. The heat range established for any spark plug is determined in design by the length of the path which the heat from the tip must travel to the thread and seat area where it is transfered to the cylinder. Spark plugs having a short insulator firing end transfer heat away rapidly and are used when the combustion chamber temperatures are relatively high. Spark plugs operating under these conditions must remain cool enough to avoid preignition and excessive gap erosion. Those types having a long insulator firing end transfer heat slowly and are used where combustion chamber temperatures are relatively low and spark plug temperature must be sustained in order to burn off normal combustion deposits and avoid fouling. For most effective sparking through any rpm range and under all conditions of operation, the electrode and insulator tip temperature must be kept high enough to vaporize or burn off particles of fuel mixture which collect on the insulator. Low plug temperatures result in electrode fouling by an accumulation of unburned fuel particles, carbon bits, sludge, etc. Selection of the correct spark plugs for an engine depends on the type of service to which it will be subjected. A cold running engine will require a hot plug and a hot running engine, a cold plug. Spark plugs recommended for use in the snow machine are the Champion J8J, or equivalent.

TROUBLE SHOOTING PROCEDURES

Trouble shooting to determine the cause of any operating problem may be broken down into the following steps:

a. Obtaining an accurate description of the trouble.

b. Quick tune-up.

c. Use of Trouble Check Chart to analyze engine performance.

An accurate description of the trouble is essential for trouble shooting. The owner's comments may provide valuable information which will serve as a clue to the cause of the problem. Find out pertinent facts such as:

a. When did this trouble start?

b. How was the snow machine loaded?

c. Did the trouble occur suddenly, or start gradually? Write down the owner's comments. A remark which first seems unimportant may serve as a valuable clue later. Check the Owner's Manual to be sure the operating instructions are being followed properly. Many operating problems are due to incorrect operation of the vehicle.

Make a systematic search when trouble shooting. Make a quick inspection for the following:

a. Correct spark plugs

b. Throttle linkage properly adjusted

c. Tank filled with fresh, clean fuel of the proper mixture

d. Spark at each spark plug

e. Carburetor adjusted correctly

f. Compression. Turn flywheel by hand or with recoil starter. If compression is present, it can be felt when turning through one complete revolution of the flywheel. If little or no compression exists in both cylinders, engine will spin very easily.

TROUBLE CHECK CHART

STARTING

1. Hard to start or won't start

   a. Empty gas tank

   b. Incorrect gas-oil ratio

   c. Old fuel, or water or dirt in fuel system

   d. Fuel line improperly connected

   e. Fuel line kinked or severely pinched

   f. Engine not primed

   g. Fuel filter clogged

   h. Engine not being choked by operator

   i. Carburetor adjustments too lean

   j. Speed control not advanced (throttle closed)

   k. Engine flooded

   l. Reed valves not functioning properly

   m. Faulty gaskets

   n. Spark plugs fouled, improperly gapped, dirty or broken

   o. Loose or broken wire or frayed insulation in electrical system

   p. Inverted breaker cam

   q. Sheared flywheel key

   r. Breaker points burned, dirty, or improperly gapped

   s. Weak compression in one or both cylinders

   t. Binding in engine

2. Engine won't crank over

   a. Pistons rusted to cylinder walls

   b. Broken connecting rod, crankshaft, or drive shaft

   c. Engine improperly assembled after repair

3. Cranks over extremely easily

   a. Rings worn

   b. Cylinder or pistons scored

   c. Hole burned in piston head

   d. Spark plug loose

e. Crankcase halves improperly sealed

4. Won't start, but kicks back and backfires

a. Flywheel key sheared

b. Timing out of adjustment

c. Reed valves broken or not seating

STARTING - MANUAL STARTER

1. Manual starter pulls out, but starter does not engage flywheel

a. Friction spring bent or burred

b. Excess grease on pawls or spring

c. Pawls bent or burred

2. Starter rope does not return

a. Recoil spring broken or binding

b. Starter housing bent

c. Loose or missing parts

3. Clattering manual starter

a. Friction spring bent or burred

b. Starter housing bent

c. Excess grease on pawls or spring

d. Dry starter spindle

STARTING - ELECTRIC STARTER

1. Starter cranks too slowly

a. Weak battery

b. Loose or corroded connections

c. Faulty starter solenoid

d. Worn brushes or spring

e. Faulty field or armature (shorted or open windings)

2. Starter will not crank motor

a. Faulty ignition key switch

b. Faulty starter solenoid

c. Broken wire in harness or connector

d. Weak battery

e. Loose or corroded connections

f. Moisture in starter motor

g. Broken or worn brushes or broken brush spring

h. Faulty field or armature (shorted or open windings)

RUNNING - LOW SPEED ONLY

1. Incorrect gas - oil ratio
2. Carburetor idle adjustment too lean or too rich
3. Reed valve standing open or preloaded shut
4. Spark plugs improperly gapped, dirty, or broken
5. Loose or broken ignition wires
6. Spark plug terminal loose
7. Weak coil or condenser
8. Breaker points burned, dirty, or improperly gapped
9. Cylinder gasket or reed plate gasket blown
10. Leaking crankcase seals

RUNNING - HIGH SPEED ONLY

1. High speed miss or intermittent spark

   a. Water in fuel

   b. Spark plug heat range incorrect

   c. Spark plugs improperly gapped or dirty, cracked insulator

   d. Ignition wires loose or broken or faulty insulation

   e. Coil or condenser weak

   f. Breaker points burned, dirty, or improperly gapped

   g. Engine improperly timed

   h. Combustion chambers carboned or fouled

2. Poor acceleration, low top rpm

   a. Incorrect gas - oil ratio

   b. Old fuel

   c. Fuel hoses plugged or kinked

   d. Fuel filter restricted

   e. Fuel pump faulty

   f. Incorrect carburetor mixture adjustments

   g. Float setting incorrect

   h. Inlet needle and seat worn or sticky

i. Timing out of adjustment

j. Spark plugs dirty or improperly gapped

k. Loose, broken, or badly insulated high tension leads

l. Coil or condenser weak

m. Breaker points worn or improperly gapped

n. Reed valves not properly seated, or broken

o. Piston rings stuck or scored

p. Excessive carbon on pistons and cylinder head

3. Idles well, but acceleration poor, dies at full throttle

a. Incorrect gas - oil ratio

b. Fuel lines or passages obstructed

c. Fuel filter clogged

d. Faulty fuel pump

e. Float level too low

f. High speed nozzle or jet clogged

g. Dirt or packing behind needles and seats

h. Choke partly closed

i. High speed needle set too lean

j. Breaker points, burned, dirty, or improperly gapped

k. Timing out of adjustment

4. Engine runs at high speed only by using hand primer

a. Fuel lines or passages obstructed

b. Fuel line leaks or fuel filter obstructed

c. Fuel pump not supplying enough fuel

d. Float level too low

e. Dirt or packing behind needles or seats

f. Carburetor adjustments

RUNNING - HIGH AND LOW SPEED

1. Engine overheats

a. Incorrect gas - oil ratio or improperly mixed fuel

b. Engine not assembled correctly during repair (binding)

2. Engine stops suddenly, or freezes up

a. No oil in gas, or no gas

b. Fuel connector faulty

c. Rusted cylinder or crankshaft

d. Bent or broken rod, crankshaft, driveshaft, or stuck piston

e. Frozen bearing

3. Engine knocks excessively

a. Incorrect gas - oil ratio

b. Spark plugs too hot

c. Flywheel loose

d. Carbon in combustion chambers and exhaust ports, or on pistons

e. Worn or loose bearings, pistons, rods, or wrist pins

f. Loose assemblies, bolts, or screws

g. Manual starter not centered

4. Excessive fuel consumption

a. Hole in fuel pump diaphragm

b. Carburetor casting porous

c. Deteriorated carburetor gaskets

d. Float level too high

e. Jets improperly adjusted

5. Vibrates excessively or runs rough and smokes

a. Too much oil mixed with gas

b. Choke not opening properly

c. Idle or high speed needles too rich

d. Float level too high

e. Air passage to carburetor obstructed

f. Faulty ignition

6. No power under heavy load

a. Faulty carburetion

b. Faulty ignition

c. Breaker points improperly gapped or dirty

d. Ignition timing late

e. Carbon build-up on piston head

f. Cylinder scored or rings stuck

TROUBLE SHOOTING GUIDE

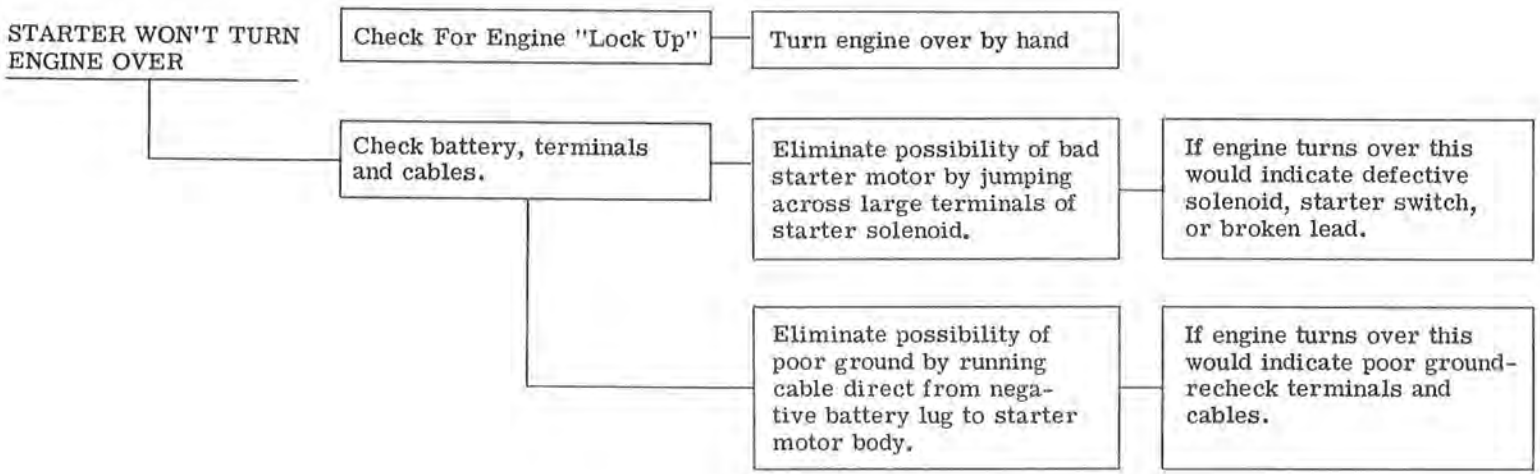

HARD STARTING-COLD

- Has engine always done this?
  - Check fuel lines and pump.
    - Primer might have air leak or bad check valve causing pump to loose prime.
- Was engine not used for a long time?
  - Engines not used for long periods accumulate water in fuel systems due to condensation. Check fuel pump filter.
    - See Section 5, Fuel System.
  - Check fuel. Engine will not start well on stale fuel.
  - Check choke.
    Check fuel system for leaks and dirt.
    Check fuel for water and dirt.
  - Check ignition.
    - See Section 6
- Is this a new characteristic?
  - Check ignition high tension with metal object inserted in spark plug terminal (screw or shear pin); hold wire so object is 1/8" from ground. Have someone turn engine over with electric starter and you should get a hot blue spark "jumping" gap.
    - See No Ignition-High Tension.
  - Check timing. Check key in flywheel. It might have been lost or sheared off, allowing flywheel to rotate on crank shaft causing engine to be out of time.

HARD STARTING-HOT Ask these questions first.

- Has engine always done this?
  - Is choke warm-up lever opening fully?
- Is this a new condition?
  - Has operator recently changed:
    1. Brand or type fuel.
    2. Brand or type of oil.
    3. Spark plugs.

    Check for water in fuel.
    - Rectify problems and change spark plugs.
- Did engine refuse to start after being run?
  - Check ignition primary.
    - See Section 6
  - Check coil and condenser (these sometimes "break down" when they become warm). Check points and timing.
    - See No Ignition - High Tension.
- Did engine run rough before it was shut off? Seem to load up?
  - Run engine with air intake housing off. If carburetor blows fuel back out venturi, pull reed valve assembly and check for cracked, broken or badly seated reeds.
    - See Section 5, Fuel System.

ENGINE DIES OUT

- Loss of or out of fuel.
  - Check fuel in tanks. Check for excessive dirt or water in fuel system.
    - If engine runs out of fuel, check for fuel or air leaks from lines or fittings.
  - Check that fuel pump is operating. See Section 5.
    - Check carburetor for dirt and etc. See Section 5, Fuel System.

NOTE: If engine dies out consistently on initial acceleration go immediately to carburetor. See Section 5, Fuel System.

- Loss of Ignition.
  - If engine dies out and will not restart even though fuel pump is OK, it would indicate loss of ignition.
    - See Section 6. No Ignition - High Tension.
- Engine stops or dies out due to seizure.
  - Pull cylinders and inspect pistons for galling.
    - See Section 8, Engine.

NOTE: This engine can seize due to overheating, lack of lubrication, or improper break in, and immediately re-start. This does not mean that engine is good. It can seize for the last two reasons without external signs of overheating.

- Check to make sure engine is running on both cylinders. Check carburetor.
  - Engine dies out. No Ignition-High Tension. Chapter 5, Fuel System.

ENGINE WON'T TURN UP

Ask operator as to conditions-was he hauling exceptional load-had he recently changed brand or type of fuel-was this condition apparent for some time or did it suddenly occur?

- Could engine have seized up?
  - If engine seized due to overheating, lack of lubrication or improper break-in it might still run well yet not attain full efficiency.
    - Pull cylinders and look for galled pistons.
- Is this condition consistent or does rpm fluctuate? If so, inspect spark plugs.
  - If plugs are fouled the condition is probably caused by pre-ignition.
    - Pre-ignition itself is usually caused by:
      Wrong spark plugs for engine.
      Heavy load causing engine to lug.

NOTE: If this condition is excessive, pull cylinders and clean carbon - correct cause and replace plugs.

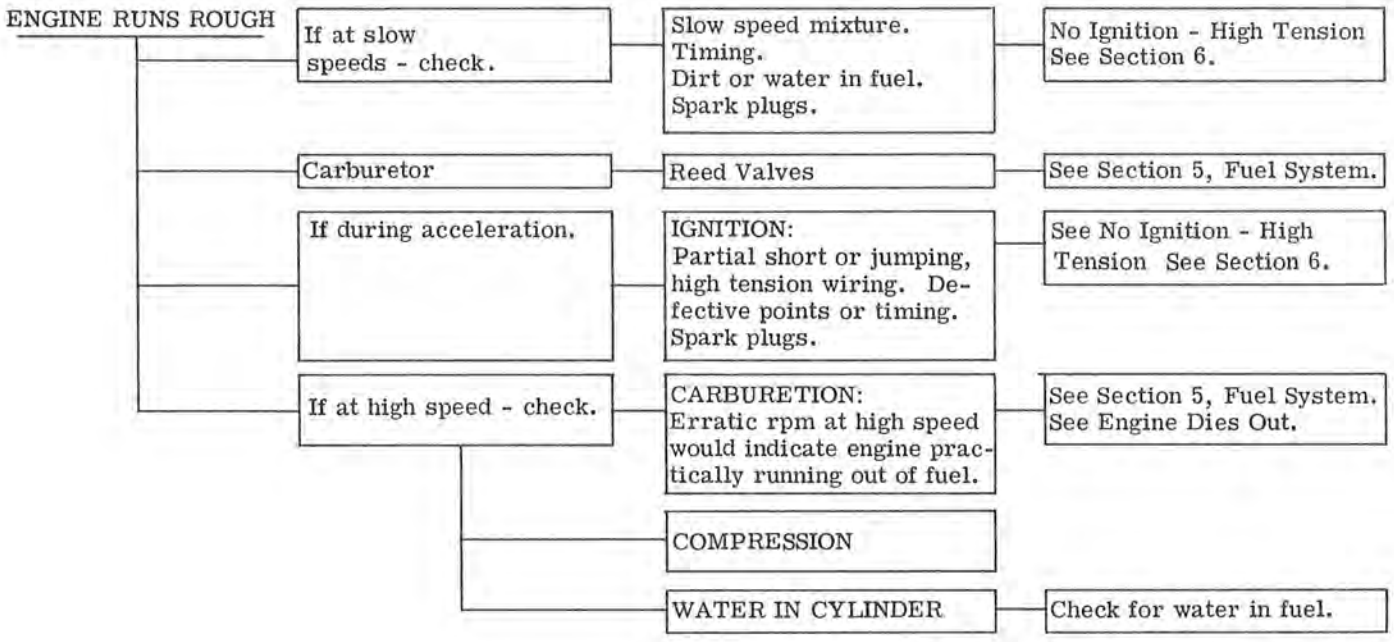
ENGINE RUNS ROUGH
If at slow speeds - check.
Slow speed mixture. Timing. Dirt or water in fuel. Spark plugs.
No Ignition - High Tension See Section 6.
Carburetor
Reed Valves
See Section 5, Fuel System.
If during acceleration.
IGNITION: Partial short or jumping, high tension wiring. Defective points or timing. Spark plugs.
See No Ignition - High Tension See Section 6.
If at high speed - check.
CARBURETION: Erratic rpm at high speed would indicate engine practically running out of fuel.
See Section 5, Fuel System. See Engine Dies Out.
COMPRESSION
WATER IN CYLINDER
Check for water in fuel.

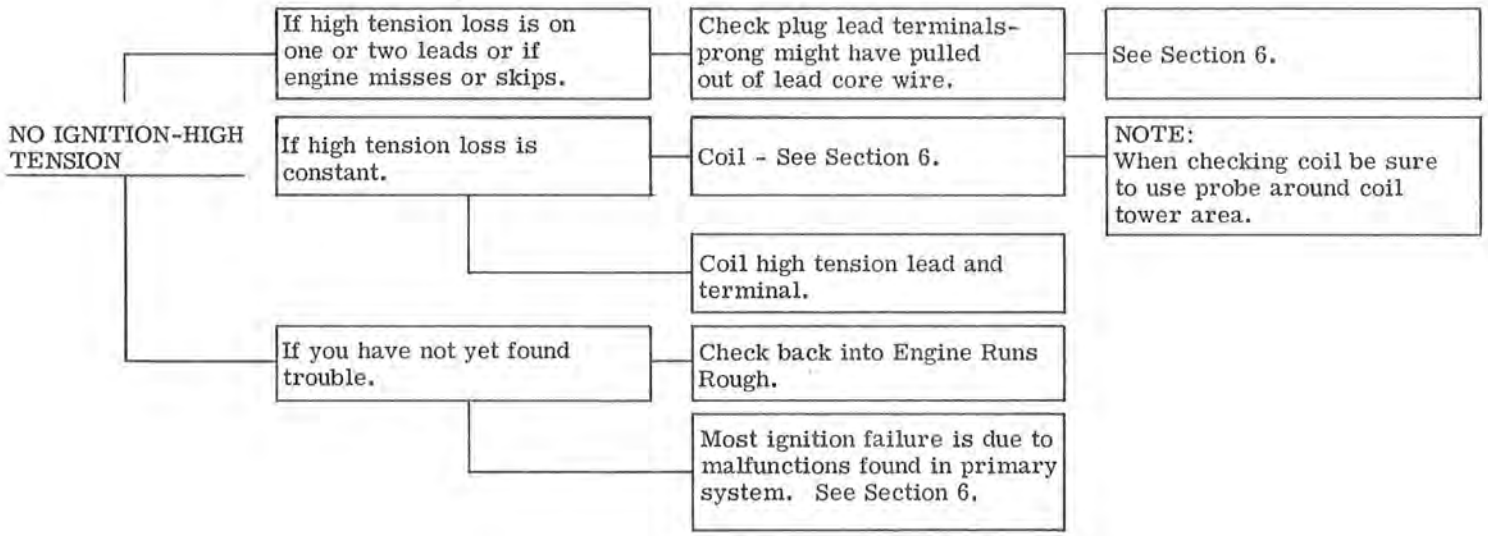
NO IGNITION-HIGH TENSION
If high tension loss is on one or two leads or if engine misses or skips.
Check plug lead terminals-prong might have pulled out of lead core wire.
See Section 6.
If high tension loss is constant.
Coil - See Section 6.
NOTE: When checking coil be sure to use probe around coil tower area.
Coil high tension lead and terminal.
If you have not yet found trouble.
Check back into Engine Runs Rough.
Most ignition failure is due to malfunctions found in primary system. See Section 6.

SECTION 4
TUNE-UP PROCEDURES

TABLE OF CONTENTS

DESCRIPTION

The purpose of a tune-up is to restore power and performance which have been lost through wear or deterioration of one or more parts of the snow machine. The successful completion of a tune-up depends on an understanding of principles of two-cycle engine operation, and a familiarity with factors affecting performance. This section gives complete tune-up procedures. Refer to Section 2 for principles of operation, and to Section 3 for trouble shooting procedures. Lubrication procedures and instructions for storage are included in Section 10.

FACTORS AFFECTING PERFORMANCE

In the normal operation of an engine, the operator may not be fully aware of the decrease in performance which takes place slowly over a long period of time. Economical, trouble-free operation can best be assured if a complete tune-up is performed at least once each year, preferably at the start of the season.

It is seldom advisable to attempt to improve performance by correcting one or two items only. Time will be saved and more lasting results obtained by following a definite and thorough procedure of analysis and by correcting all items affecting power and performance.

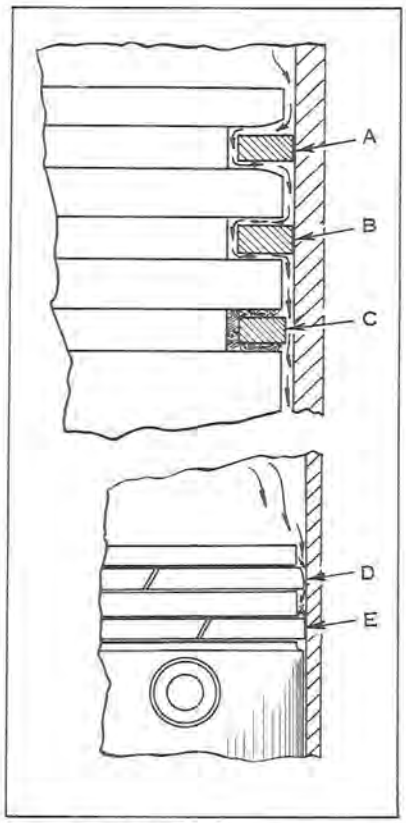

A WORN RING GROOVES
B WARPED RING - INSUFFICIENT GAP
C CARBONED RING AND GROOVE
D WORN RING - ROUNDED EDGE
E SERVICEABLE RING - SQUARE EDGE

Figure 4-1

FUEL SYSTEM

A fresh fuel mixture, with the correct ratio of oil and gasoline, is necessary for peak engine performance. The tank should be emptied of old fuel and refilled with a fresh supply at the beginning of the season and at every tune-up. A stale fuel mixture may cause hard starting, stalling, and faulty operation. Inadequate fuel delivery, as the result of a faulty fuel pump or clogged filter, will affect high-speed performance. Incorrect carburetor needle adjustments may cause operating difficulties at any speed. Faulty choke operation or incorrect use of the manual choke (warm-up lever) by the operator may cause hard starting, rough running, or poor fuel economy.

IGNITION SYSTEM

Spark plugs having the proper heat range are very important for peak performance of the motor. See Section 6 for a complete description of spark plugs. A weak spark, which may be the result of faulty ignition system components, will cause hard starting, misfiring, or poor high-speed performance. The spark plugs and ignition system components are frequently checked first in a tune-up because of their importance to the operation of the motor.

COMPRESSION

Compression must be well sealed by the piston and piston rings in the cylinder to realize maximum power and performance. A compression check is important because an engine with low or uneven compression cannot be tuned successfully to give peak performance. It is essential that compression be checked before proceeding with an engine tune-up.

An automotive type compression gage may be used as follows: Make certain that choke (warm-up lever) is off, throttle is wide open, and both spark plugs are removed. Turn the engine over quickly three or four times with the manual starter. Compression should be 100 pounds per square inch minimum.

NEW MOTOR DELIVERY

Complete instructions for putting a new snow machine into operation are included in the Owner's Manual packed with each motor. Be sure the customer receives this manual and understands the instructions given in it. The following list is a reminder of important things to check when putting a new snow machine into operation.

a. Be sure spark plugs are installed and tightened securely with spark plug gaskets in place.

b. Be sure spark plug wires are securely attached to spark plug terminals.

c. Be sure the correct gasoline and oil mixture is used. Pour fuel into tank through a fine mesh strainer.

d. Caution the customer not to operate a new engine at continuous full power until at least one tankful of fuel has been used. During this time, short periods of full power may be used. Instruct the customer to follow the break-in procedure described in the Owner's Manual.

e. Be sure that the customer understands how to operate the engine correctly, especially such things as the neutral shift lockout, warm-up lever, and electric starting.

f. Caution the customer to follow warm-up procedures as described in the Owner's Manual.

TUNE-UP PROCEDURES

Components which affect power and performance can be divided into three groups, namely:

1. items affecting compression,

2. items affecting ignition,

3. items affecting carburetion.

Any tune-up procedure should cover these groups in the order given. Correction of items affecting carburetion should not be attempted until all items affecting compression and ignition have been corrected satisfactorily. Attempts to overcome compression or ignition system deficiencies by altering carburetor settings will result in poor overall performance or increased fuel consumption. This section covers only those parts of a tune-up which involve adjustments, cleaning, and checking for performance. Trouble shooting procedures are covered in Section 3. Repair and replacement of parts, as determined through trouble shooting, is covered in Sections 5 through 9.

a. Test run vehicle, checking particularly the following items:

   1. function of neutral shift

   2. function of brake

   3. engine performance

   4. ski alignment and handling

b. Check compression as described above.

c. Remove manual starter and fan housing (see Section 6).

If engine starts hard, knocks, or does not come up to speed, check for loose flywheel and connecting rod bearings by bouncing flywheel back and forth, and listening for knocks. Excessive wear in crankshaft journal bearings can be detected by moving flywheel back and forth.

d. If compression and bearing condition checks are not satisfactory, engine overhaul is required (see Section 8).

e. Test for adequate spark at each cylinder, using a spark checker. Inspect and test points, condenser, magneto coils, ignition coils, and spark plug high tension leads (see Section 6).

f. Check spark plugs to be sure they are the correct type. Clean spark plugs and regap, or replace as necessary.

g. Check breaker points, and clean or adjust as necessary.

h. Drain fuel tank, flush, and clean thoroughly (see Section 5). Refill with fresh fuel mixture, and check primer operation.

i. Inspect fuel pump and hoses. Clean filter, or replace filter element and gasket.

j. Thoroughly lubricate snow machine (see Section 10).

k. Tighten all external bolts, nuts, and screws, and retorque cylinder head nuts and spark plugs to specified torque.

l. Check track tension and ski alignment (see Section 9).

m. Start engine and allow to warm up; check for flow of oil from chain oiler. Check track alignment (see Section 9).

n. Repeat test run on vehicle. Check carburetor needle adjustments.

o. After engine has run sufficiently to indicate satisfactory condition, stop and restart it several times. Operate it on high and low speeds. Check acceleration from low to high speed. Retighten cylinder head nuts after motor has cooled to specified torque.

p. Clean and dry snow machine thoroughly, before returning it to customer. Fog motor for storage, using OMC Accessories Rust Preventative Oil.

SECTION 5
FUEL SYSTEM

TABLE OF CONTENTS

DESCRIPTION

The complete fuel system consists of the gas tank assembly and lines, the primer assembly, the fuel pump and filter assembly, the carburetor, and the reed valve assembly. This section gives complete service procedures on all components of the fuel system, and carburetor adjustments. Principles of carburetion are discussed in Section 2.

FUEL FLOW

Fuel is drawn from the fuel tank by the fuel pump, which is operated by changes in intake manifold pressure. The filter element, which is part of the fuel pump and filter assembly, removes water, dirt, or other impurities from the fuel before the fuel passes through the pump or carburetor. The primer assembly, operated from the control panel by means of the primer rod, injects raw fuel into the intake manifold before starting (see Figure 5-1).

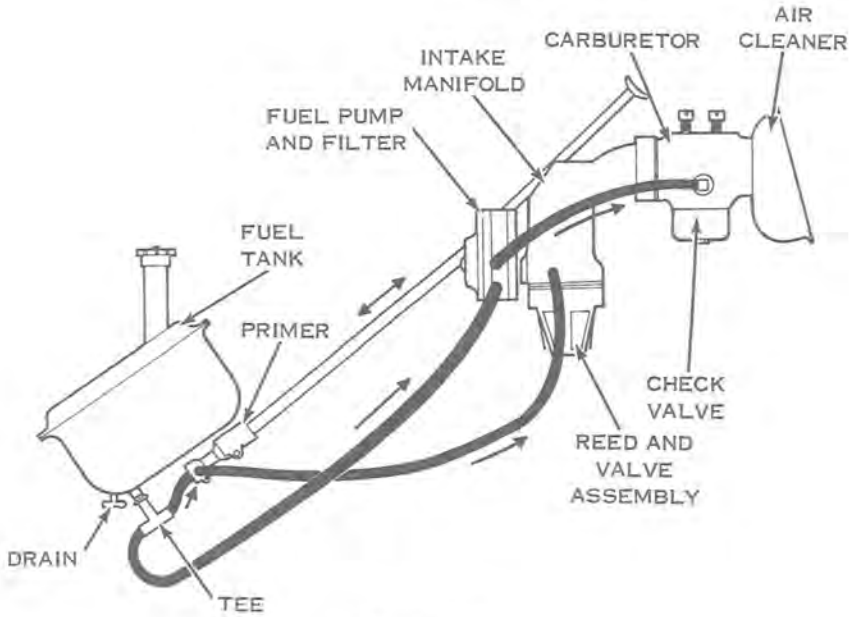

Figure 5-1

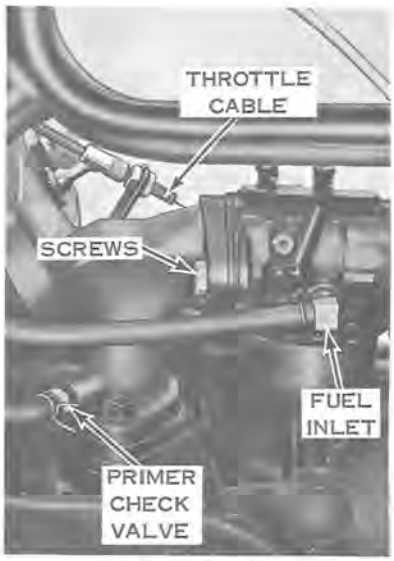

Figure 5-2

CARBURETOR AND REED VALVES

REMOVAL

a. Disconnect throttle cable at carburetor (see Figure 5-2).

b. Disconnect fuel pump hose at carburetor elbow (see Figure 5-2).

c. Remove screws, nuts, and washers attaching carburetor to intake manifold (see Figure 5-2). Remove carburetor from manifold.

d. Disconnect fuel primer hose at check valve (see Figure 5-2). Remove two nuts attaching intake manifold, reed valve body, and gaskets to crankcase studs. Remove the intake manifold and reed valve assembly, taking care to avoid damaging the reed valves.

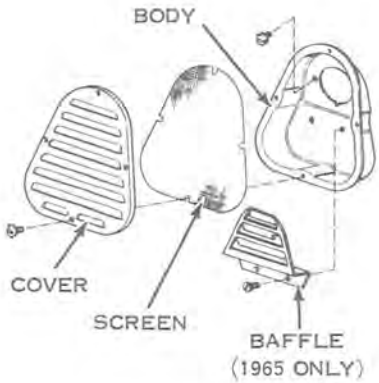

Figure 5-3

DISASSEMBLY

a. Remove air cleaner cover and screen. Remove baffle (1965) or screen (1966) and air cleaner body (see Figure 5-3).

b. Drain carburetor by removing nut and gasket from float bowl (see Figure 5-4).

c. Remove float pin and float from carburetor body. Remove inlet needle, seat, and gasket assembly.

d. Remove high-speed nozzle from carburetor body.

e. Remove high-speed adjusting needle, idle adjusting needle, and springs from carburetor body.

f. Carburetor is now disassembled sufficiently for cleaning. Disassembly of choke and throttle valves and shafts is recommended only if carburetor is being immersed in cleaning solvent. If the carburetor body is merely being rinsed off and blown dry immediately, do not remove or disassemble choke and throttle valves. Choke and throttle valves attaching the screws are staked after assembly to prevent loosening and will either damage shafts or break off during removal if not filed. Clean and inspect carburetor body, float bowl, and parts as described under "Cleaning, Inspection, and Repair".

CLEANING, INSPECTION, AND REPAIR

a. Clean all parts except gaskets, float, and inlet needle in carburetor cleaning solvent. Wash air cleaner screen (1965) or replace (1966). Be sure all particles of gaskets are removed from gasket surfaces. Flush out passages in carburetor body with solvent and remove any gummy deposits with OMC Accessories Engine Cleaner.

b. Blow out all drilled passages with compressed air and check to make sure they are clean. NOTE: DO NOT under any circumstances use wire or other pointed instrument to clean passages or holes in carburetor. Holes and passages are carefully calibrated and use of wire or other cleaning instrument will destroy calibration of carburetor.

c. After cleaning in solvent, rinse all parts clean of solvent in kerosene, and blow dry with compressed air. NOTE: DO NOT dry parts with a cloth as lint may cause trouble in the reassembled carburetor.

d. Inspect float. If float has become damaged, discard it and install a new one. Check float arm wear in the float pin and needle valve contact areas, and replace if necessary.

e. Inspect float pin for wear, which may result from excessive vibration. Replace if necessary.

f. Inspect float needle valve and seat, and replace if nicked, scratched, or worn (see Figure 5-5). The valve seat and needle are a matched set; if either is worn, both parts must be replaced. Use a new sealing gasket when installing needle seat.

g. Inspect the tapered ends of a high-speed adjusting needle and the idle adjusting needle for grooves, nicks, or scratches (see Figure 5-6). If any are found, replace the needle valve. DO NOT attempt to alter the shape of the needle valve.

h. Check operation of choke and throttle shafts; if excessive wear exists, remove valves by filing attaching screws, and replace shafts.

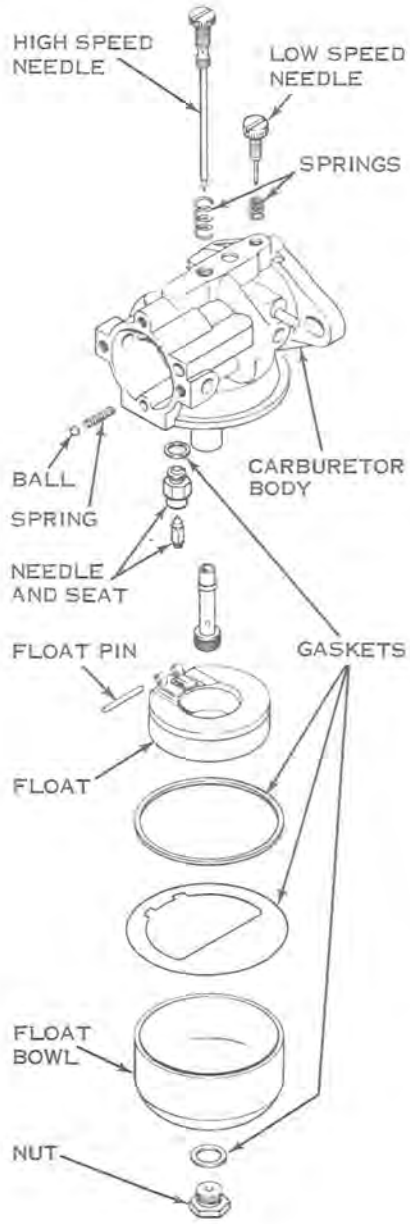

Figure 5-4

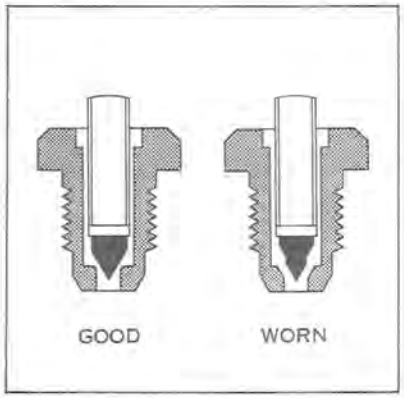

Figure 5-5

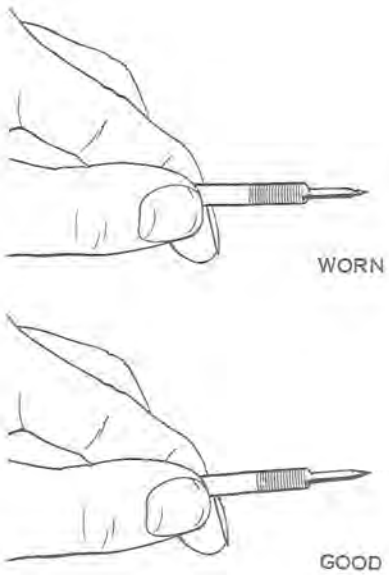

Figure 5-6

Figure 5-7

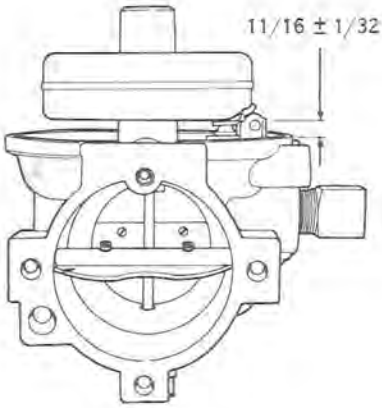

Figure 5-8

i. Check all gasket sealing surfaces for nicks, scratches, or distortion. Slight irregularities can be corrected with the use of a surface plate and 180 grit emery cloth.

REED VALVES

a. Rinse reed valves and reed valve body in cleaning solvent and blow dry with light air pressure to prevent reed damage.

b. Inspect the reed valve assembly and disassemble if necessary (see Figure 5-7). Special caution is necessary in disassembling the reed valve assembly. DO NOT damage or interchange the reeds.

c. The reeds must be flat to maintain a seal with the reed valve body. DO NOT under any circumstances bend or flex the reeds by hand. It is advisable to clean, inspect, and immediately reassemble the reed valve assembly, rather than leave it apart for reassembly later.

d. The reeds are designed to maintain constant contact with the reed valve body, and to spring away from the reed valve body when predetermined pressure is exerted against them. Attach the reed valves and retainer plates to the reed valve body, then examine reeds carefully to make certain that they lie flat against body.

e. Check tightness of reed valve retaining screws and tighten any that appear loose. Tighten screws to torque specified in Section 11.

REASSEMBLY

Reassemble the carburetor, paying particular attention to the following procedure. Keep all dust, dirt, and lint out of the carburetor during reassembly. Be sure that parts are clean and free from gum, varnish, and corrosion when reassembling them. Replace all gaskets and sealing washers. DO NOT attempt to use original gaskets and washers, as leaks may develop after the engine is back in use.

a. Install high-speed nozzle in carburetor body. Replace inlet needle valve seat and gasket, needle valve, and float and float pin.

b. Check for correct positioning of float (see Figure 5-8). Turn carburetor body upside down so weight of float closes needle. Top of float should be parallel with bowl rim of casting.

c. Reassemble float bowl and nut to carburetor body, using new gaskets.

d. Install idle adjusting needle and high-speed adjusting needle, then back them out approximately one turn. DO NOT turn needle valves down tight as tapers on needles may be damaged. Adjust needles as described under "Adjustments" after installing carburetor on intake manifold.

INSTALLATION

a. Place reed valve assembly on crankcase studs, using a new gasket. Install intake manifold on crankcase studs using a new gasket. Fasten with nuts and lockwashers.

b. Install primer check valve, using a new check valve washer.

c. Attach assembled carburetor to intake manifold with screws, nuts, and lockwashers, using a new carburetor gasket.

d. Connect fuel pump hose at carburetor elbow. Connect fuel primer hose at check valve.

e. Connect throttle cable to throttle valve shaft. Adjust throttle cable so that lever on handle bar is against stop when throttle is in off position.

f. Assemble air cleaner to carburetor.

ADJUSTMENTS

a. Turn idle adjusting needle and high-speed adjusting needle clockwise until needles seat gently. DO NOT force. Turn needles counterclockwise 1-1/4 turn. NOTE: Allow motor to reach normal operating temperature by running at fast idle before proceeding to next step.

b. With motor at operating temperature, run at fast idle (1500 rpm minimum). NOTE: This adjustment must be made with the "neutral shift" knob out, or in the neutral position. Adjust idle adjusting needle until motor runs fastest and smoothest performance is obtained. Readjust idle stop screw for 1500 rpm idle speed.

c. Adjust high-speed adjusting needle as necessary with motor operating at full throttle in gear. CAUTION: DO NOT overspeed engine when the vehicle is stationary and "neutral" shift knob is out or in neutral position. Block vehicle off track or make adjustment during test run.

d. Repeat adjustments of both needles, if necessary, until best performance is obtained. Final adjustment must be made on high-speed adjusting needle while driving vehicle at full throttle. CAUTION: DO NOT set too lean. Needle MUST be open 1-1/8 turns minimum to provide adequate engine lubrication.

e. Adjust idle speed for 1500 rpm minimum.

FUEL PUMP AND FILTER

REMOVAL

a. Disconnect two hoses from fuel pump and filter assembly (see Figure 5-9).

b. Remove two screws attaching pump and filter assembly to intake manifold (see Figure 5-9), and remove pump and filter assembly. NOTE: Filter assembly may be removed for cleaning and inspection without removing pump assembly by removing filter cap screw.

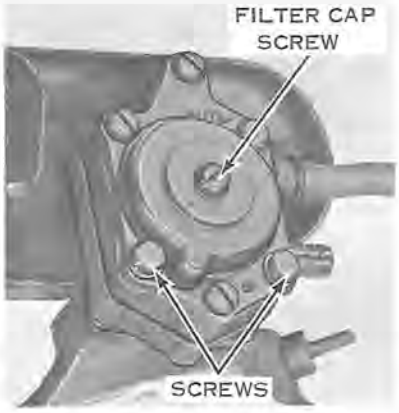

Figure 5-9

CLEANING, INSPECTION, AND REPAIR

a. The fuel pump components are not serviced separately. If a malfunction occurs, replace the complete pump.

b. Inspect the filter for accumulation of sediment by removing the filter capscrew and the filter cap (see Figure 5-10). Clean the filter cover and fuel connectors in solvent and blow dry.

c. Check for a clogged filter element. The fuel filter element on an engine that has been in storage may be clogged without appearing to be. During storage, volatile agents as well as anti-gum and anti-varnish agents evaporate from the gasoline that remains in the fuel filter. The result is contamination of the filter element with a clear form of varnish. This varnish is not readily soluble in

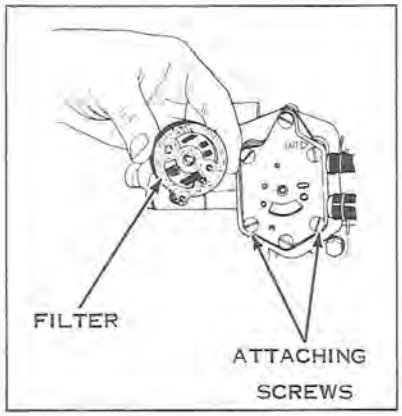

Figure 5-10

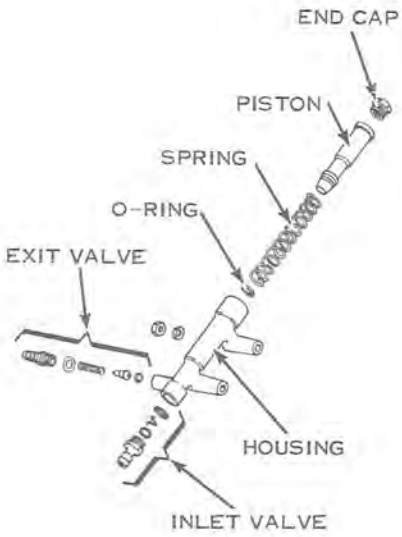

Figure 5-11

gasoline or cleaning solvent; therefore, the filter should be replaced at the start of each season. NOTE: Since the purpose of the filter is not only to trap dirt but also to prevent moisture from entering the carburetor, do not attempt to run the engine with the filter element removed. For best results, replace the fuel filter element annually.

REASSEMBLY

a. Reassemble the fuel filter.

b. Attach fuel pump and filter assembly to intake manifold with screws.

c. Reconnect fuel hoses.

FUEL PRIMER

a. The primer is a simple piston pump which pumps raw fuel from the fuel tank, thru the check valve, directly into the intake manifold above the reed valves. The essential parts of the primer include the housing, the piston and "O" ring, the inlet valve, and the exit valve (see Figure 5-11).

b. To check operation of the primer, connect a short hose to the exit valve. A spurt of fuel should be evident when the plunger is depressed. If no fuel is discharged, the inlet valve, the exit valve, or the piston "O" ring may be at fault.

c. Pinch off the inlet hose and again depress the primer knob. If the primer knob does not depress easily the exit valve is clogged. If fuel discharge is evident, the inlet valve is not seating. If there is no fuel discharge and the piston moves easily, the piston "O" ring is worn.

d. Disassemble primer, inspecting components, and replace worn components as necessary.

Figure 5-12

FUEL TANK

a. For correct fuel and oil mixtures and break-in instructions, see Section 10.

b. The importance of using a fresh, clean fuel mixture should not be underestimated. An aging fuel mixture precipitates petroleum gum which will clog screens, fuel passages, carburetor orifices, reed valves, etc. The use of last year's fuel is false economy. The tank should be emptied of old fuel and filled with a fresh supply at the start of each season.

c. A drain screw is installed in the bottom of the vehicle (see Figure 5-12) for complete draining of the tank (1966 model). A drain cock (1965 model) can be reached without removing the fuel tank by removing a coverplate (see Figure 5-13). Complete draining and flushing of the tank should be done at the start of each season and as a part of each tune-up.

d. It is advisable to leave tank filled with fuel during storage to avoid moisture precipitation. Atmospheric changes will cause moisture condensation in a partially filled tank. The resulting water accumulation can cause hard starting, possible stalling, and rough operation.

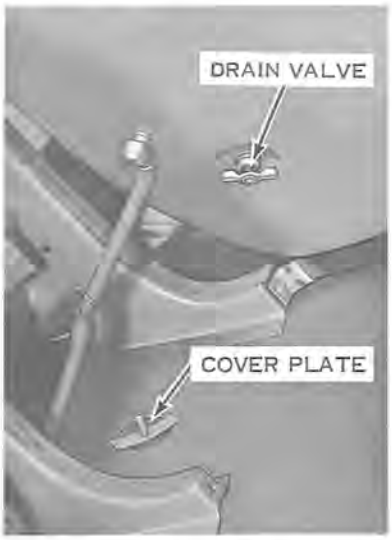

Figure 5-13

SECTION 6
IGNITION AND ELECTRICAL SYSTEMS

TABLE OF CONTENTS

DESCRIPTION

The ignition system consists of the magneto drive coils, condenser, breaker point assembly, ignition coils, ignition key switch, spark plugs, and the necessary wiring. Because the engine is a two-cycle, twin opposed cylinder design, a single breaker point assembly and single lobed cam are used, with one (1965) or two (1966) ignition coils, to supply spark simultaneously to both cylinders.

The electrical system consists of the alternator coils, head and taillights, light and ignition switches and wiring. In addition, on models equipped with electric starting, the electrical system includes the storage battery, electric starting motor, starter solenoid, and bridge rectifier. The alternator coils produce alternating current which changes in frequency and voltage in proportion to engine speed. On models having electric starting, this alternating current output is rectified (changed to direct current) by a diode bridge rectifier and used to charge the battery. Direct current is then used to power the head and taillights and the electric starter motor.

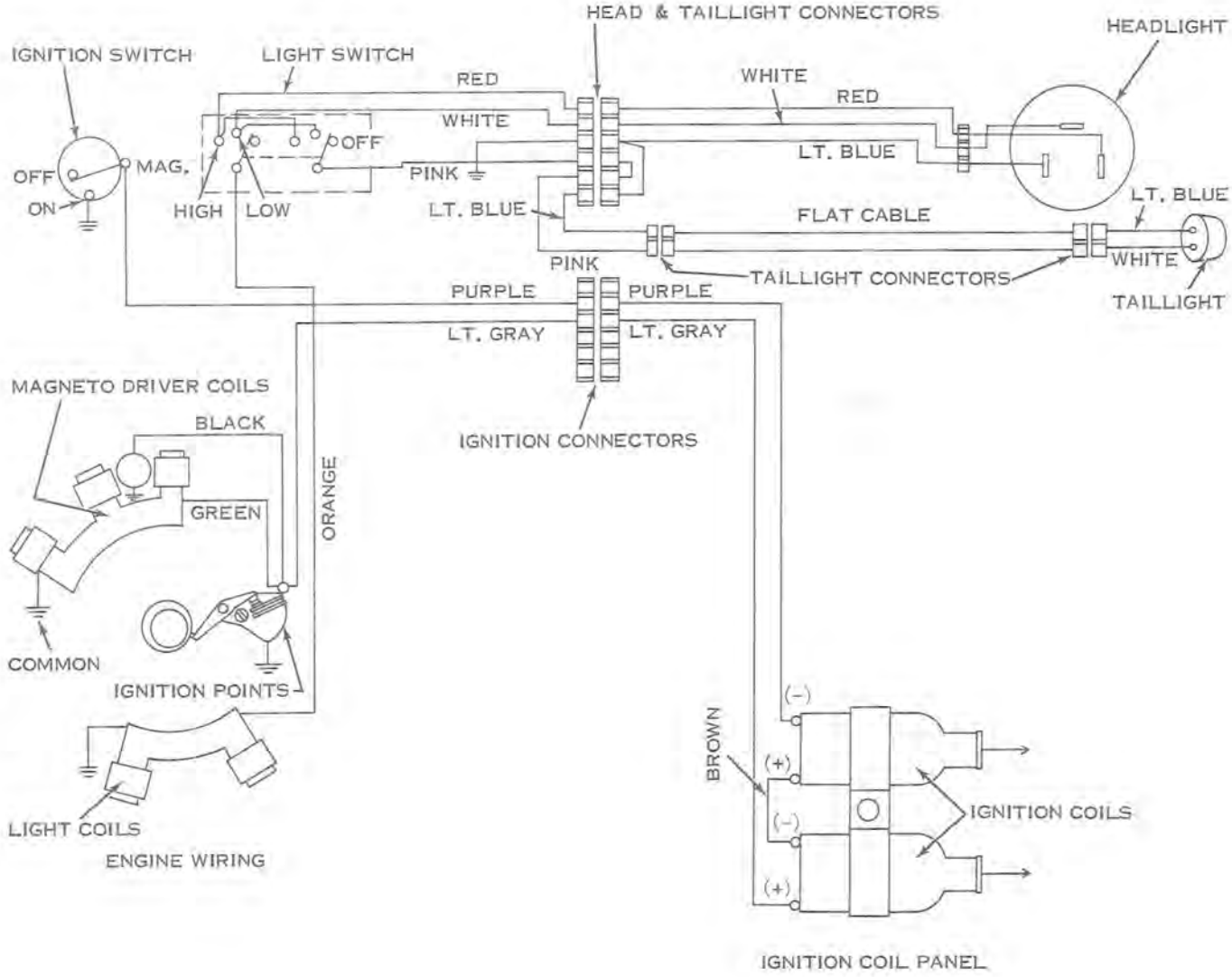

Figure 6-1

This section gives complete service procedures on all components of the ignition and electrical systems, breaker point adjustment, and starter motor belt adjustment. Principles of magneto operation are discussed in Section 2. Complete wiring diagrams are included at the beginning of this section (see Figures 6-1 and 6-2).

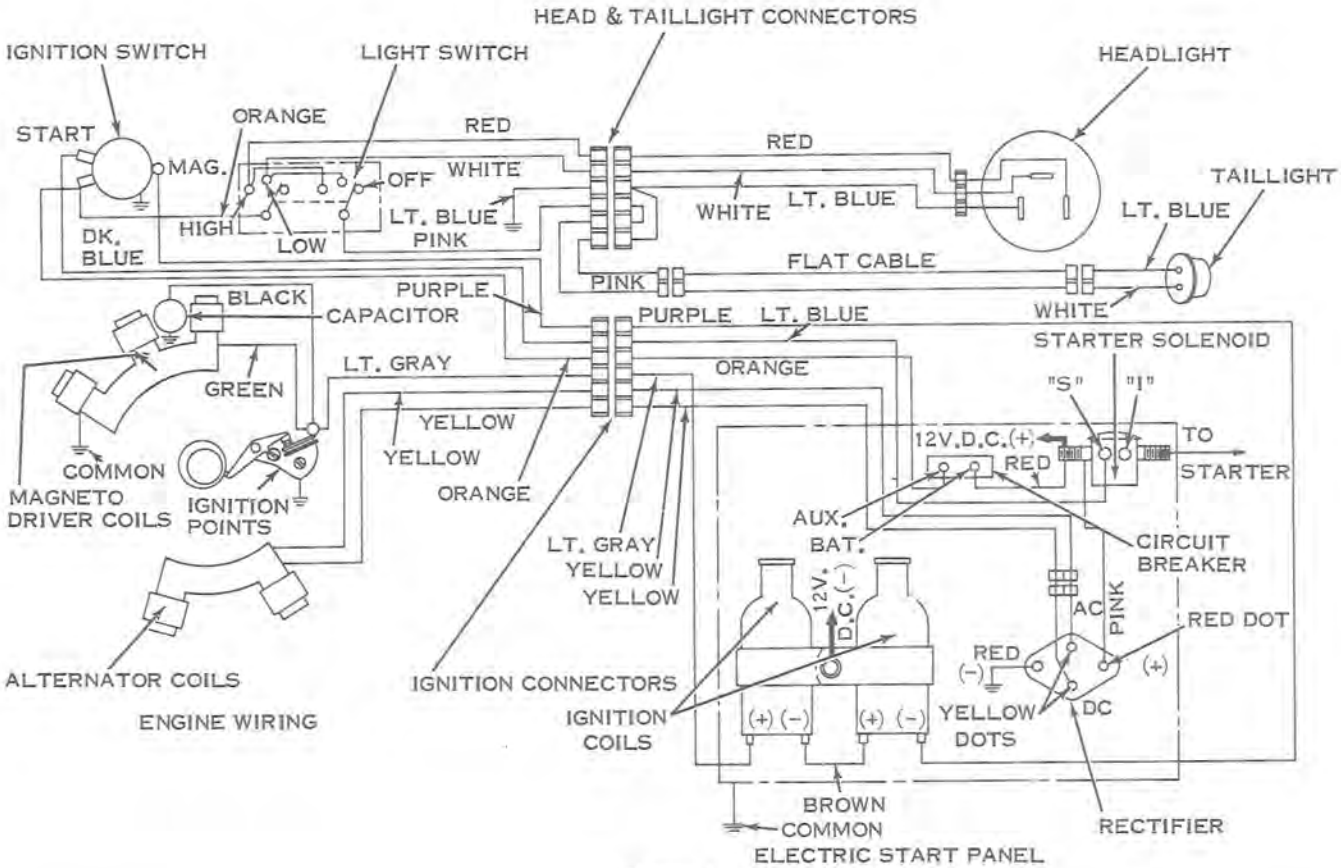

Figure 6-2

TEST EQUIPMENT

The test procedures outlined in this section require the use of a multitester called a volt-ohm-milliameter, or a VOM. These instruments can be obtained from local or national electronics supply houses (see Figure 6-3).

CAUTION

DO NOT use a test instrument having more than a 12 volt source to check rectifier diodes.

To determine accurately the condition of components of the ignition system, an ignition analyzer should be used. Without the use of test equipment, coils, condensers, or breaker point assemblies may be replaced needlessly. A wide variety of ignition analyzers is available from various manufacturers. In addition, some automotive testers having the proper specifications can be used. The use of the Graham,

Figure 6-3

Merc-O-Tronic, or Stevens ignition analyzers is particularly recommended, since these units have provisions for checking all functions of the ignition system (see Figure 6-4).

Detailed instructions for the use of any tester are provided with the unit; therefore, only general information is given here. All components of the ignition system should be checked, even though replacing a single part seems to have corrected the trouble. For example, replacing points may have increased the spark (coil output), but further improvement may be realized if a condenser is found to be weak and is replaced.

Figure 6-4

MAGNETO

REMOVAL

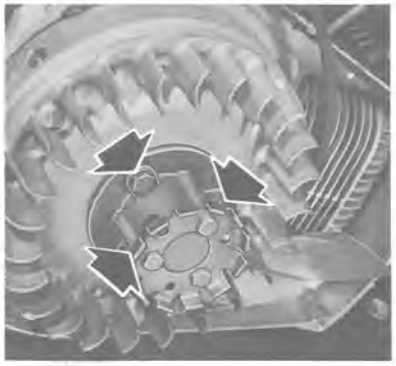

Figure 6-5

a. Remove manual starter. Remove four screws and remove starter from fan housing.

b. Remove three screws attaching ratchet and ratchet mount to flywheel (see Figure 6-5). Remove ratchet mount.

c. If vehicle is equipped with electric starting, remove outer starter belt guard (see Figure 6-6). Loosen belt tension and remove starter belt from starter pulley.

d. Remove front fan housing (see Figure 6-7).

e. Remove flywheel nut (see Figure 6-8). Use spark plug wrench handle in hole on rim of flywheel to keep flywheel from turning while removing nut.

Figure 6-6

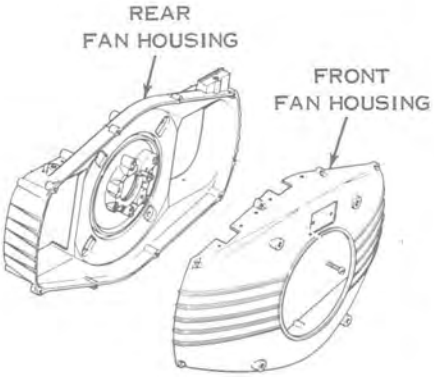

Figure 6-7

Figure 6-8

f. Remove flywheel from crankshaft (see Figure 6-9), using flywheel puller (Service Tool #378103). Magneto drive coils, condenser, and breaker point assembly are now accessible for servicing (see Figure 6-10).

g. Disconnect primary leads from ignition coil terminals (see Figure 6-11). Pull high tension leads from ignition coils. Loosen ignition coil clamp nut to remove ignition coils.

Figure 6-9

TESTING

For conclusive testing, the ignition coils should be removed from the electrical panel assembly. The breaker point assembly, condenser, and magneto drive and alternator coils, however, are tested in position on the fan housing, and are removed only for replacement.

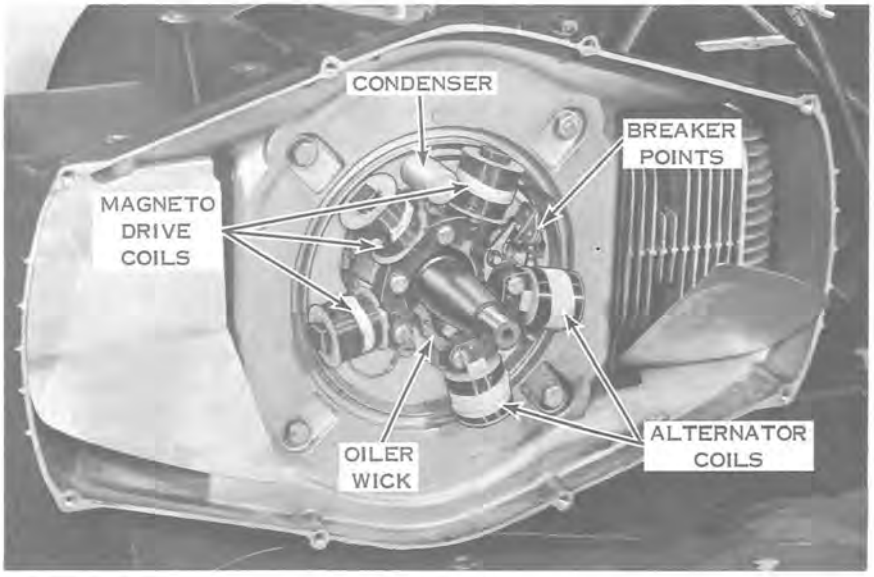

Figure 6-10

Figure 6-11

BREAKER POINTS

Breaker points should be inspected at least once each season and replaced whenever necessary. Under normal running conditions, breaker point contacts will appear slightly rough and gray in color. Abnormal points will appear excessively pitted, may have a considerable amount of material transferred from one contact surface to the other, and will generally be blue in color.

Severe pitting, burning, or bluing can usually be traced to such conditions as a faulty condenser, or deposits of foreign material, especially grease or oil, on the contact surfaces. Faulty condensers require replacement. Foreign deposits can be attributed to careless handling of points during installation, use of excessive lubricant on the oiler wick, or a leaky front crankcase seal.

Clean the breaker point post thoroughly before installing new breaker points to provide good electrical contact between the breaker base and post (see Figure 6-12). Turn the eccentric adjusting screw into the plate until it bottoms so that there is adequate screw engagement to hold breaker point adjustment.

Breaker point spring tension is predetermined and does not require adjustment once breaker assemblies have been installed.

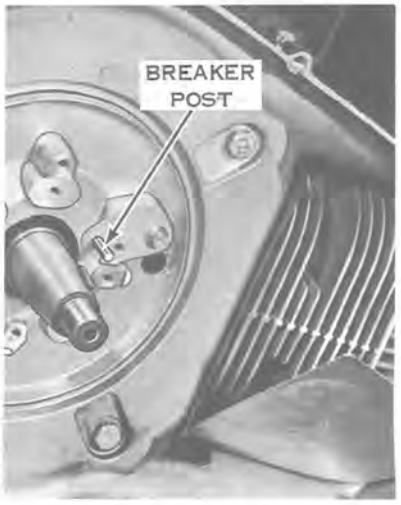

Figure 6-12

Dirt, foreign particles, and oil are detrimental to contact performance. The oils and acids from a person's hand, even though clean, can affect contact resistance. Oil deposits on the points will cause them to burn after a very short period of operation. If points need cleaning, saturate a piece of bias tape in alcohol or trichlorethylene and work it up and down between the points. Finish with a clean, dry piece of hard finish paper card stock to remove any residue which might cause point burning. NOTE: If points cannot be cleaned satisfactorily by this method, replace them. DO NOT use an abrasive stone or file to remove residue across new or old breaker contacts. If new breaker points have high resistance across their contact surfaces, making use of a continuity meter during breaker point adjustment difficult, snap the contacts open and closed manually several times.

CONDENSER

The following four factors affect condenser performance; each factor must be considered in making a complete condenser test.

1. Breakdown - A failure of the condenser insulation; a direct short between metallic elements in the condenser. This prevents any condenser action.

2. Low insulation resistance (leakage) - Prevents condenser from holding a charge. All condensers are subject to leakage which up to a certain limit is not objectionable.

3. High series resistance - Excessive resistance in the condenser circuit due to loose condenser mounting, broken strands or poor connections inside the condenser, or to defective lead connections. This will prevent normal condenser action, causing rapid breaker point burning or ignition failure.

4. Capacity - Determined by the design and condition of the condenser. For a complete check of the condenser, use a tester (see Figure 6-13) which will test the condenser for correct capacity, series resistance, and leakage resistance. Follow the instructions given by the manufacturer of the test equipment. The condenser should be replaced if it fails to meet any one of the three tests.

Figure 6-13

CAUTION

High voltage is applied to the condenser in the leakage test. Handle leads carefully and turn selector switch to "DISCHARGE" before disconnecting leads from condenser.

MAGNETO DRIVE COILS

A good magneto drive coil will not function properly if incorrectly mounted or connected. If the coil heels are not properly aligned with the bosses on the rear fan housing, the gap between the flywheel magnet and coil heels may be too great. Connections that are not clean and tight will cause high resistance which will limit current flow. Visually inspect the coil mounting and connections before condemning a coil. Test the coil for correct resistance, using the ignition analyzer.

Figure 6-14

IGNITION COILS

Ignition coils should be tested for correct secondary resistance, correct primary resistance, coil polarity, and coil output. In addition, the coil insulation should be tested for leakage.

CAUTION

Perform all tests on a wooden or insulated bench top to prevent leakage or shock hazards. Follow the equipment manufacturer's instructions (see Figure 6-14). A low reading on the tester indicates a weak coil which must be replaced. No attempt should be made to improve this spark by increasing primary current; a coil is defective if it cannot be made to give a good reading on the specified primary current.

HIGH TENSION LEADS

Spark plug high tension leads may be tested for leakage or insulation failures by using the ignition analyzer and an ignition coil (see Figure 6-15). Connect the coil to the ignition analyzer as for the coil test. Connect a separate test lead with suitable clips to the secondary terminal of the coil and to the conductor of the spark plug lead. Probe the entire insulated surface of the spark plug lead with the grounded test probe. Arcing will be apparent wherever the insulation has broken down, due to moisture or carbon trails.

REASSEMBLY

a. Install magneto drive coils, making certain that coil laminations are flush with bosses on fan housing (see Figure 6-16).

b. Install breaker assembly over breaker post.

c. Install condenser. Connect magneto drive coil lead, condenser lead, and lead from electrical panel assembly to breaker point screw terminal.

d. Install new oiler clip and wick in position on mounting boss (see Figure 6-17). Apply Delco #U-1901 1948792 distributor lubricant to oiler wick and to point cam follower on side toward cam rotation.

Figure 6-15

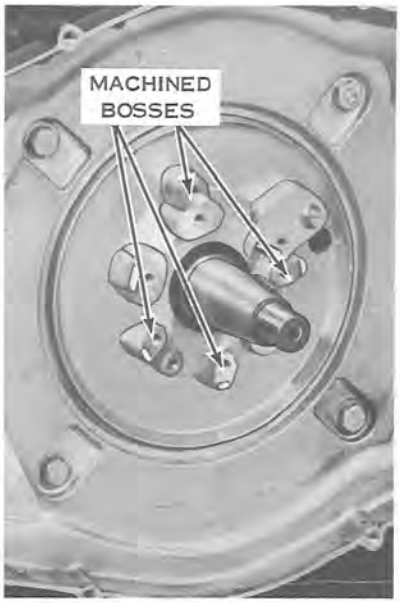

Figure 6-16

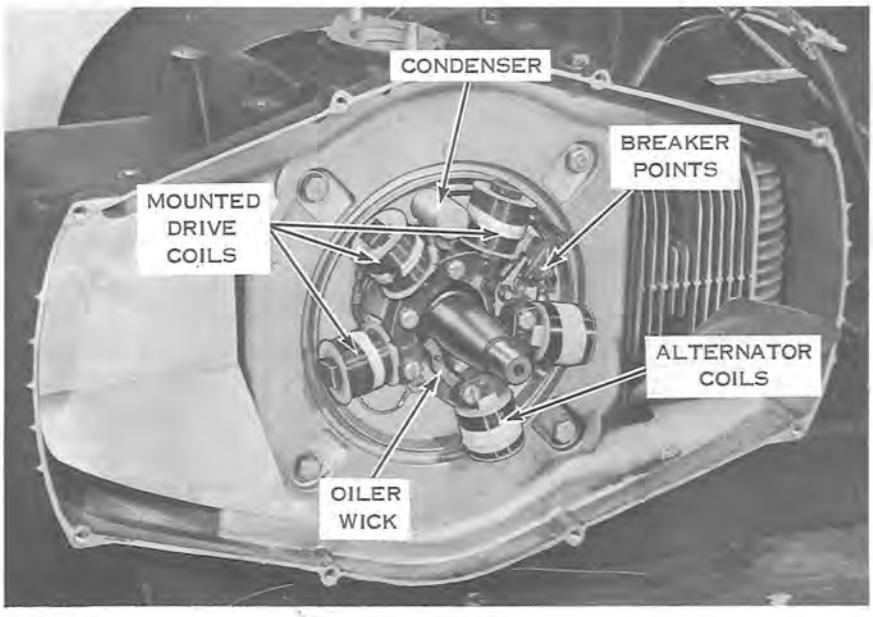

Figure 6-17

e. Adjust breaker points, using a feeler gage and with the breaker cam temporarily installed on the crankshaft (see Figure 6-18). Point gap should be set to .020-.022 inch with the breaker arm on the high lobe of the cam (full open).

f. Position cam in flywheel (see Figure 6-19). Edge of keyway and cam must be aligned with edge of keyway in flywheel when viewed from outside of flywheel (see Figure 6-20).

Figure 6-18

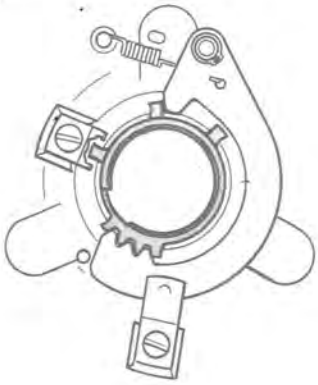

A

Figure 6-19

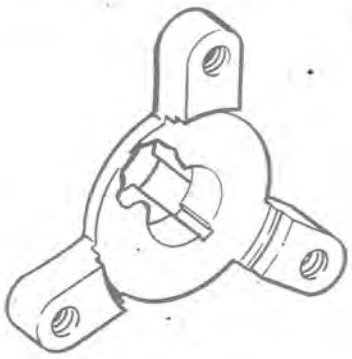

B

Figure 6-20

g. Rotate crankshaft so that crankshaft keyway is 180 degrees opposite breaker point pivot pin. This will bring low point on cam next to fiber block, facilitating assembly.

h. Place Woodruff key in crankshaft keyway. Place flywheel and cam assembly on crankshaft. When flywheel is properly seated, outer edge will be approximately 1/32 inch above shoulder on crankshaft. DO NOT use force. If it is impossible to position flywheel properly, remove it and repeat above procedure.

i. Place washer and flywheel nut in position. Torque flywheel nut to 40 - 45 foot pounds.

j. When this procedure is followed, engine is timed correctly without further adjustment. To recheck, use an automotive timing light, either a 12 volt or 110 volt model. One of the cooling fins on the flywheel across from the keyway has a small raised boss, which is painted yellow. With the engine operating at idle speed (1500 rpm), this painted mark can be seen in center of timing hole when light is focused there. Timing hole is approximately 3/8 inch in diameter, and is located to the upper right of the manual starter (at about the 2 o'clock position) in the front fan housing (see Figure 6-21).

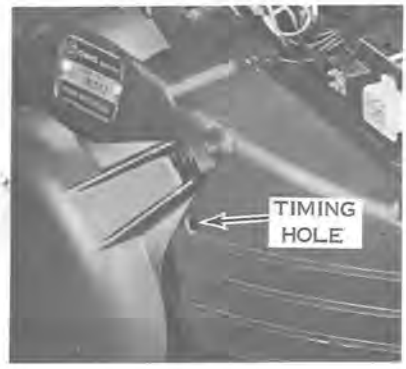

Figure 6-21

SPARK PLUGS

The condition and appearance of spark plugs taken from an engine may be a guide to the type and source of engine trouble. Proper spark plug heat range and normal engine conditions will produce powdery deposits of a rust brown to grayish or tan color on the insulator firing end, and a minor degree of electrode wear (see Figure 6-22). Highly leaded fuels may produce white to yellowish powdery deposits on the firing end of the spark plug. These deposits will not interfere with normal spark plug performance if plugs are cleaned at regular service intervals.

Figure 6-22

a. If the insulator tip is an exceptionally light tan or whitish color, or the center electrode burned away, the heat range may be too hot (see Figure 6-23).

Figure 6-23

Figure 6-24

Figure 6-25

b. A dark, black or sootish coloration, or wet appearance, ordinarily indicates the heat range as being too cold (see Figure 6-24). Black, sooty deposits on the entire firing end of the spark plug result from incomplete combustion due to an overly rich air-fuel mixture, incorrect choke setting, or misfiring caused by faulty ignition components.

c. A definite white coloration may indicate the presence of moisture in the combustion chamber. Similar deposits are caused by preignition.

d. Oil fouling deposits wet, sludgy deposits and is a result of misfiring or of excessive oil in the fuel mixture (see Figure 6-25).

e. Burned or overheated spark plugs may be identified by a white, burned, or blistered insulator nose, and badly eroded electrodes. Excessive deposits in the combustion chamber, a lean fuel mixture or improperly installed spark plugs can cause overheating.

The condition of spark plugs may provide an indication of other conditions requiring attention. Inspect each plug and gasket as it is removed. Place the spark plugs in a holder in order of removal, to assist in locating trouble. Inspect each plug for worn electrodes, glazed, broken, or blistered porcelain, and replace plugs where necessary. Plugs that are severely carbon fouled, that have blistered or cracked insulator tips, or plugs that have eroded electrodes must always be replaced. Plugs that are slightly contaminated with deposits, or which have wider than recommended gap settings can be cleaned and regapped for further use. Plugs that appear slightly contaminated can be cleaned by careful scraping, using a small knife or similar instrument. After combustion deposits have been removed, bend the side electrode back slightly so that the center electrode can be filed flat.

DO NOT clean plugs on abrasive blasting machines. This type of cleaning tends to remove the hard, smooth porcelain glaze from the insulator tip and reduces the tip's resistance to the formation of combustion deposits. Blasting also tends to pack sand between the insulator top and the metal shell of the plug. If the sand is not removed before installing the plug, it may pass through the engine, causing piston or cylinder wall scoring.

After the plug has been cleaned, adjust the gap to .028 inch by bending the side electrode. Adjust only the side electrode, as attempting to bend

Figure 6-26

the center electrode will crack the insulator. Use a round wire feeler gage to measure gap adjustment (see Figure 6-26).

Poor engine performance and premature spark plug failure may result from improper spark plug installation. Before installing the plug, be sure the plug seat in the cylinder head is cleaned and free from obstructions. Inspect spark plug hole threads, clean, and coat with DuPage high temperature thread compound before installing plugs. Always use new gaskets when installing spark plugs. Tighten spark plugs to 20 to 20-1/2 foot pounds, using a torque wrench.

Improper installation is one of the greatest single causes of unsatisfactory spark plug performance. Improper installation is the result of one or more of the following:

1. Installation of plugs with insufficient torque to correctly compress the gasket.
2. Installation of plugs using excessive torque which changes gap settings.
3. Installation of plugs on dirty gasket seal.
4. Installation of plugs in corroded spark plug hole threads.

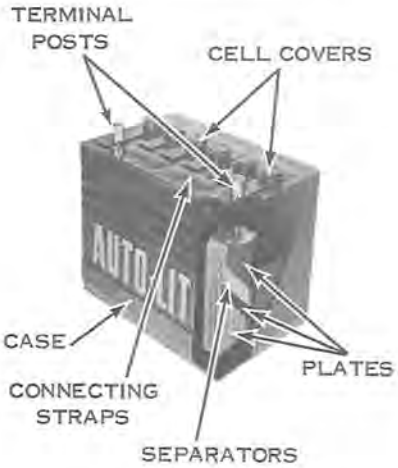

Figure 6-27

BATTERY

DESCRIPTION

The battery's primary function is to provide power to operate the starting motor; however, the battery also supplies power to operate the lights when the engine is not running at full speed. The storage battery is a secondary chemical generator - one that produces an electric current by chemical action after having been charged from an outside source. Each cell in the storage battery consists of a negative plate of sponge lead and a positive plate of lead peroxide immersed in a solution of water and sulphuric acid (see Figure 6-27). After being charged, each cell will produce a voltage of about 2.1 volts. Six cells, connected in series, are assembled in a case to make up a 12-volt battery.

SPECIFICATIONS

Due to the extreme weather and temperature conditions under which the battery must operate, proper battery selection is very important. The battery recommended for best performance is a 12-volt, 42 ampere hour battery, or better, with a minimum of 2.7 minutes cold starting capacity at 150 amperes discharge, 0° Fahrenheit, and a 5-second voltage reading of 8.4 volts. It is important to remember that a customer's complaint of poor starting may be traceable to a battery not having these recommended specifications. The following batteries or their equivalents are recommended:

Prestolite Type HN-10
Autolite Type 10-HN
Williard Type 22-NF

Figure 6-28

INSTALLATION

To provide maximum protection from battery acid damage in the event of accidental upset, special spill-proof battery caps (see Figure 6-28) are supplied with the vehicle. Make certain the original caps are removed and these special caps are installed.

The hold-down clamp should be tight enough to hold the battery, but should not exert undue force on the case. If the clamp is too tight, distortion and damage to battery case will result.

CAUTION

Battery acid is dangerous and will burn the skin as well as cause damage to metal, clothing, or wood. If acid is spilled, flush it off at once with plenty of clear water, and neutralize with a solution of ammonia or baking soda.

Connect battery cables, making sure clamps are tight on battery posts to insure good contact. Apply a coat of petroleum jelly to exposed areas of the battery posts and clamp connectors to retard corrosion.

CAUTION

Correct battery polarity is extremely important. A battery must be connected with its negative (-) post connected to ground. If the positive (+) post is connected to ground, damage to the charging system will result.

BATTERY SERVICING

Check outside of battery for damage or signs of abuse such as case or broken covers. Check inside of battery by removing vent caps and inspecting for low electrolyte level. If battery shows signs of serious damage or abuse, it should be replaced. Visually inspect the battery for the following:

1. Corrosion
2. Frayed or broken cables
3. Cracked case or cell covers
4. Loose hold down clamps
5. Low or overfilled electrolyte

BATTERY CARE

Check the following at regular intervals:

1. Clean battery top and terminals by washing with a solution of ammonia or baking soda. Keep vent plugs tight so that solution does not enter cells. After washing, flush top of battery with clean water.
2. Keep battery terminal connections tight and free from corrosion. If corroded, clean cable terminals and battery posts separately with a soda solution and a wire brush. Inspect cables for fraying or broken strands.
3. Keep electrolyte above the plates and separators at all times. Adhere to manufacturer's instructions for maintaining fluid level. Check electrolyte and add distilled water as necessary at weekly or semi-monthly intervals. Never add acid except when it is definitely known that some has been lost by spilling. If water is added in freezing weather, charge the battery to full charge at once.

4. Keep the battery nearly fully charged at all times. Check the state of charge at frequent intervals by making specific gravity readings with a battery hydrometer (see Figure 6-29). Note that a hydrometer reading is not accurate if water has been added recently, due to the fact that the water may not be mixed with the electrolyte.

Self-discharge will cause storage batteries to become discharged and sulphated if they are not properly maintained in storage. To minimize self-discharge, store batteries in as cool a place as possible, so long as the electrolyte does not freeze. A battery which has been allowed to stand idle for a long period of time may be so badly damaged by sulphation that it can never be restored to a normal charged condition. Batteries should be recharged every 30 days to prevent this damage. If storage temperature is hot, more frequent charging will be necessary. Add water if necessary before charging, to bring electrolyte to proper level. Fully charged batteries have been known to withstand temperatures as low as -90° F.; a discharged battery will freeze at about -19° F., perhaps causing bursting of both the cell and battery cases.

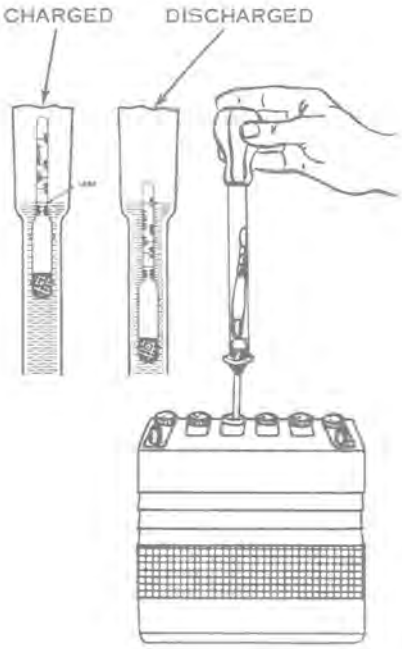

Figure 6-29

BATTERY TESTING

a. Make sure battery is fully charged as described under SLOW CHARGING. Hydrometer readings taken on partially charged batteries are unreliable for the following test.

b. Measure specific gravity of electroyte in each cell and compare readings with the following; if cell readings are between 1.250 and 1.290, the battery is ready for use. Any variation in the specific gravity between cells within this range does not indicate a defective battery. Readings should be corrected to 80° Fahrenheit for comparison. If this specific gravity of any cell falls outside this range (1.250 to 1.290), replace the battery.

BATTERY CHARGING

For best performance a good battery should be fully charged before being returned to service. DO NOT recharge the battery by the fast charge method. This method does not restore the full charge and also shortens the life of the battery. If the battery is to be fully charged by means of a quick charger, charge rate must be tapered (reduced to a safe limit) when the electrolyte temperature reaches 125° F. or when gassing becomes excessive. Failure to do so may harm the battery.

SLOW CHARGING

Adjust electrolyte to proper level by adding water, then charge battery at a maximum rate of 5 amperes until fully charged. Full charge of the battery is indicated when all cell gravities do not increase when checked at three intervals of one hour and all cells are gassing freely. Due to this low rate during slow charging, plenty of time must be allowed. Charge periods of 24 hours or more are often required.

STARTER SYSTEM

DESCRIPTION

The electric starter system consists of the starter motor, starter solenoid, and the necessary cables and wires with their connectors. The starter motor converts electrical energy from the battery into mechanical power which is transmitted to the engine through the starter belt. The starter switch controls the operation by activating the starter solenoid which makes and breaks the circuit between the battery and the starter motor.

The starter solenoid (see Figure 6-30) closes the circuit through a movable contact disc which strikes two terminal contacts that are connected to the starter motor circuit. The solenoid winding, when energized, exerts a magnetic pull on the solenoid plunger, causing it to move the contact disc against the terminal contacts.

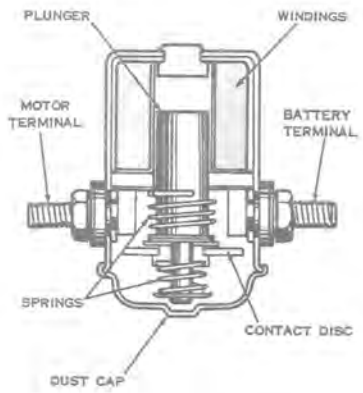

Figure 6-30

The starter motor drive pinion (see Figure 6-31) is disengaged when at rest and is made to engage the starter motor drive belt by the rotation of the starter motor armature. When the engine has started, the starter pinion is driven faster than the starter motor shaft and becomes disengaged.

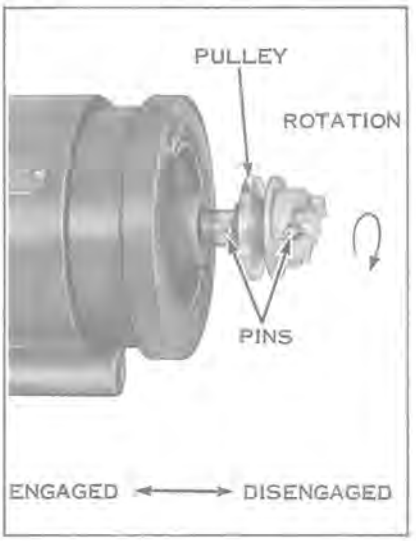

Figure 6-31

MAINTENANCE

The only starter motor maintenance required is periodic cleaning of the outside of the starter motor and drive and a check of the starter belt tension. No periodic lubrication of the starter motor or solenoid is required. Starter motor need be removed for reconditioning only every 1000 hours or if the following tests indicate that the starter is not operating properly. If the starter motor does not crank the engine or if it cranks too slowly, check the battery, cables, and connections. Inspect all wiring connections in the starter circuit to insure that they are clean and tight. Proceed with the following tests if additional troubleshooting is necessary.

STARTER SYSTEM TESTING

The following tests fall into two groups, starter circuit tests and starter motor tests. Starter circuit testing is a quick means of pinpointing causes of hard starting which may result from a faulty electrical component in the starter circuit, and can be performed without removing any components from the engine. Starter motor tests are used to determine starter motor condition, and must be performed with the starter removed from the motor. NOTE: All starter circuit testing must be done with a fully charged, 12-volt battery.

STARTER CIRCUIT TESTING

Starter Motor Amperage Draw Test

a. Ground spark plug high tension leads so that engine can be cranked without firing. Place clamp-on ammeter capable of reading at least 200 amperes against starter motor lead (see Figure 6-32).

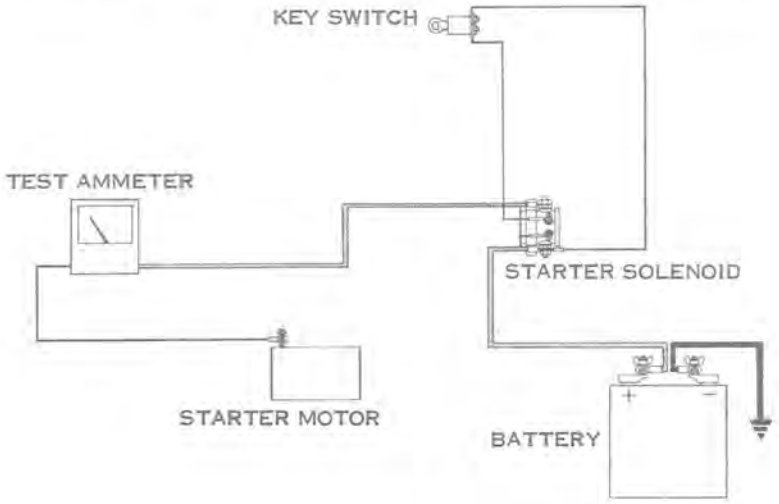

Figure 6-32

b. Turn ignition switch to START and observe amperage reading with engine cranking. Current should be between 110 amperes minimum and 140 amperes maximum after initial surge.

CAUTION

DO NOT operate starter motor for more than thirty seconds at a time without pausing to allow motor to cool for at least two minutes.

Starter Motor Available Voltage Test

a. Inspect battery and cables to make sure that battery has ample capacity for cranking. NOTE: Engine must be at normal operating temperature when test is made.

b. Ground spark plug high tension leads so that engine can be cranked without firing.

c. Connect a voltmeter across starter motor (see Figure 6-33), with positive (+) lead to starter motor terminal, and negative (-) lead to ground on starter frame.

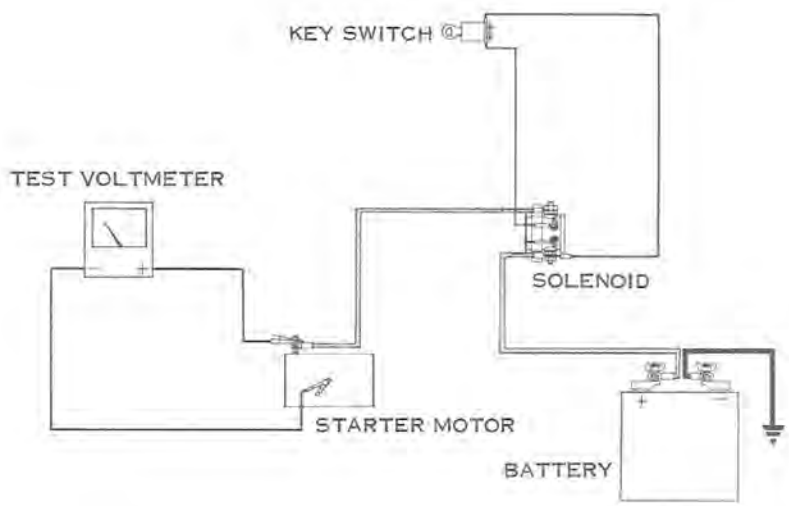

Figure 6-33

d. Turn ignition switch to START to crank engine and observe voltmeter reading as quickly as possible.

CAUTION

Avoid running starter motor continuously for more than 30 seconds during test to prevent overheating. Allow ample time between tests for starter motor temperature to normalize. Voltmeter readings will change as starter temperature increases.

e. If starter motor turns engine at normal cranking speed with a voltage reading between 9.5 volts minimum and 10.5 volts maximum, starter motor is satisfactory. If available voltage reading at the starter motor is low, review the following chart for probable causes.

Starter System Voltage Drop Test

a. By making a systematic check from the positive battery terminal, through the starting circuit and back to the negative battery terminal, any component or electrical connection having excessive resistance, thus causing high voltage drop and subsequent hard starting, can be pinpointed (see Figure 6-34).

b. Ground spark plug high tension leads so that engine can be cranked without firing. Connect voltmeter and turn ignition switch to START to crank engine. NOTE: By placing voltmeter leads against battery, solenoid, and starter motor terminals rather than against connecting cable ends, each connection can be tested for high resistance along with component.

c. Clean and retighten, or replace, any connection, cable, or component having greater than specified voltage drop.

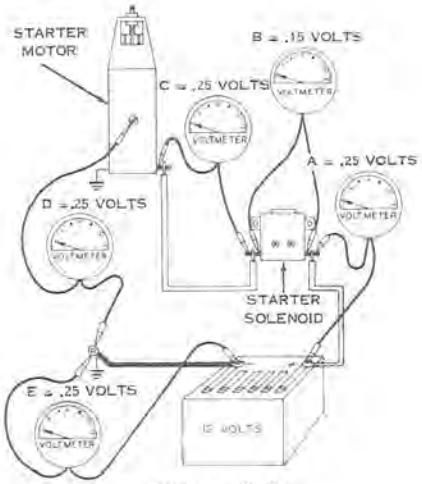

Figure 6-34

STARTER MOTOR TESTING

The no-load test is used to determine quickly the general mechanical and electrical condition of the starter motor. The stalled torque test is used to determine whether or not the starter motor has sufficient torque to crank to engine for fast starting.

No-Load Test

a. Connect starter, with an ammeter in series, to a 6-volt source (see Figure 6-35). Use a tachometer or rpm indicator to indicate armature speed.

b. Ammeter should indicate 60 amperes maximum; rpm indicator should indicate 4200 rpm minimum. If readings are not as specified, check for binding in starter or failure of windings. NOTE: If starter motor turns slowly, smokes after a very few seconds of running, or gets hot instantly, stop testing. Disassemble starter and check for shorts.

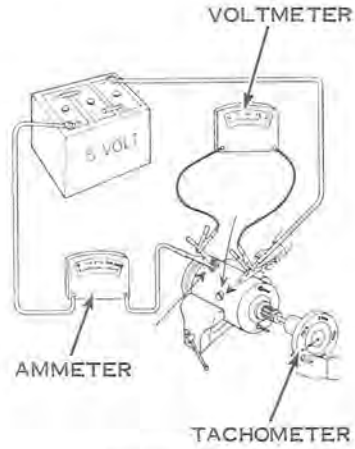

Figure 6-35

Stalled Torque Test

a. Connect a voltmeter between the starter terminal and motor frame. Using a torque wrench to stall motor armature (see Figure 6-36), connect starter motor through an ammeter to a 12-volt battery.

b. Voltmeter reading should be approximately 10 volts during this test. Torque should be a minimum of 108 inch pounds or 9 foot pounds and current should be a maximum of 405 amperes.

CAUTION

If motor smokes or gets hot instantly, stop testing, disassemble starter and check for shorts. Use only a fully charged 12-volt battery when making stalled torque test. Obtain readings as rapidly as possible to prevent starter overheating. Allow sufficient time for starter to return to room temperature if it is necessary to repeat stalled torque test.

c. Check each armature coil for open circuits by rotating torque wrench handle through a 180 degree arc after initial torque reading has been noted. This must be done quickly. Torque should be uniform through this arc, although reading will decrease slightly each time brush moves from one commutator segment to another. If an appreciably wide area is found in which torque is very low, disassemble starter and check armature.

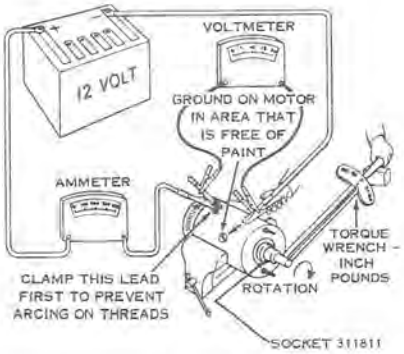

Figure 6-36

INSPECTION OF STARTER MOTOR

a. Check armature on a growler for shorted turns (see Figure 6-37). NOTE: Follow operating instructions furnished with armature growler for proper test procedures. Clean between commutator segments of armature and recheck armature on growler. If shorted turns are still indicated, replace armature.

b. Check armature for grounded windings (see Figure 6-38). Rotate one lead of continuity tester (test light or meter) around circumference of commutator while holding other continuity meter lead on the armature core or shaft. An indication of continuity means that the armature windings are grounded and armature must be replaced.

c. Check armature for open windings by using a test meter. Measure resistance between adjacent commutator segments, using LO OHMS scale. Rotate leads around entire circumference of commutator. An open winding is indicated if any one reading is much higher (three times higher or more) than the average reading.

d. Inspect commutator segments. If they are dirty or show signs of wear, turn commutator in a lathe until surface is clean and smooth.

e. After turning commutator, undercut insulation between commutator segments to a depth of approximately 1/32 inch. The undercut must be flat at the bottom (triangular groove cuts are unsatisfactory) and should extend beyond the brush contact area for the full length of each insulated groove (see Figure 6-39).

Figure 6-37

Figure 6-38

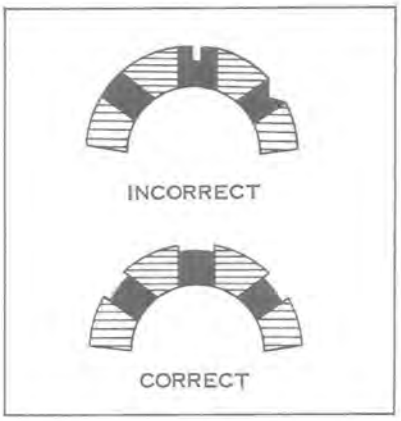

Figure 6-39

f. After commutator has been undercut, sand lightly with No. 00 sandpaper to remove burrs left during the undercutting process. After sanding, clean commutator thoroughly, removing all traces of metal chips or sanding grit, and recheck armature on growler.

g. Inspect armature insulation for indications of overheating or damaged windings. Clean off any deposits of carbon which may contribute to later failure of the windings. NOTE: Starter motor components should not be washed off in cleaning solvents. Most solvents will soften varnish insulation used on armature and field windings. All starter motor components can be cleaned adequately with a clean cloth or soft brush. Cleaning end heads in solvent may dissolve the oils that have impregnated into the armature shaft bearings. If these oils are removed, bearing or armature shaft wear can be expected. Cleaning of armature in solvent will leave oily residue on the commutator segments, causing arcing between the commutator and brushes.

Brushes

a. Inspect the brushes; replace if one-half worn, damaged, or cracked. Replace brush springs if weak.

b. Inspect brush springs. Springs should have a pressure of 35 to 90 ounces when compressed to 9/32 inch. Measure brush tension with scale hook under brush screw or under bend in brush spring, and take reading as brush just leaves commutator. Pull of spring scale must be directly opposite line of force exerted by brush spring.

BELT TENSION

a. Correct starter motor drive belt tension is extremely important. A loose belt will cause slippage and a tight belt will cause a ratcheting effect of the drive pulley.

b. Remove outer belt guard. Check for 9/32 inch clearance between back edge of starter belt and belt slot in front fan housing.

c. Adjust belt tension so that outer surface of drive belt is flush with rim of drive pulley (see Figure 6-40). Be certain that pulley halves are closed (drive position) when making this adjustment.

Figure 6-40

ALTERNATOR

TROUBLE SHOOTING

Failure in the alternator charging circuit will usually show up when the head and taillights do not function, or when the battery fails to retain a charge sufficient to start the engine consistently. To determine the cause of trouble, check the condition of the battery and electrical connections throughout the circuit, before proceeding with electrical testing. A visual inspection may be all that is required to locate the trouble.

CAUTION

Disconnect battery leads before tightening or changing any connections.

a. Battery. Check condition as described under Battery Testing, Battery Inspection, and Battery Care.

b. Wiring. The importance of connections which are good electrically and mechanically throughout the circuit cannot be overemphasized. The largest percentage of electrical system failures is caused by one or more loose or dirty connections. Check for corroded or loose connections, and for worn or frayed insulation. Check the battery cables for possible reverse polarity.

c. Connections. All electrical connections are readily accessible by removing the engine shroud (see Figure 6-41). Although connections are easily made, care must be used when fastening terminals together. If connectors are not assembled properly, one or more of the terminals may back out of the housing, preventing one or more of the electrical circuits from operating. To eliminate problems due to improper connections, examine the terminals on both halves of the connectors after assembly to be sure that all terminal ends are in place.

Figure 6-41

If a visual inspection of the electrical system shows all components to be in good condition, an electrical inspection will be necessary to determine which component of the charging system is the cause of trouble.

Figure 6-42

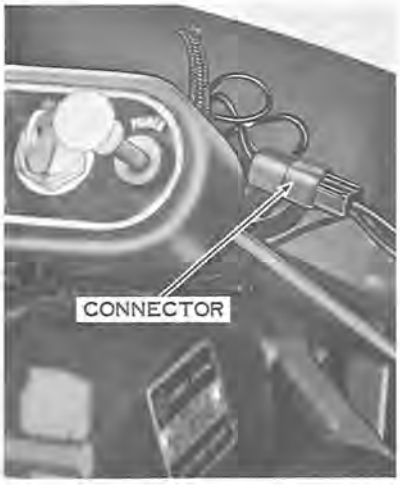

Figure 6-43

To check alternator output, connect a voltmeter (0-20 VAC) across the alternator coils. On vehicles with manual starting, these connections will be the orange lead on the light switch and ground. On vehicles with electric starting, these connections will be the two yellow leads at the rectifier connector. NOTE: Disconnect alternator from rectifier for this test. Start engine and run briefly at 4000 rpm. Voltmeter should indicate approximately 16 volts.

Using an ohmmeter at the same connections, measure resistance of alternator coils. Readings should be approximately .8 ohm.

CHECKING RECTIFIER DIODES

Two methods may be used to check for shorted or open diodes, an ohmmeter or 12 volt test lamp.

CAUTION

DO NOT use a 110 volt test lamp to test diodes. Diodes are checked with test meter selector in "OHMS" position ("HI OHMS" on the Stevens Model AT-100). This is basically a continuity test.

Disconnect all leads from rectifier assembly. Check a diode by connecting test leads to adjacent terminals on rectifier assembly and noting the reading (see Figure 6-42). Reverse the test leads and again note the reading. If both readings are very low, or if both readings are very high, the diode is defective. A good diode will give one low reading and one high reading.

Repeat the test procedure for the other diodes by connecting the test leads between adjacent terminals.

If a test light is used, light should show with connections in one direction only. If lamp lights or fails to light in both directions, the diode is defective.

ALTERNATOR COIL REPLACEMENT

a. Remove flywheel as described under "Magneto Removal".

b. Disconnect alternator coil lead (see Figure 6-43).

c. Remove alternator coil assembly from rear fan housing.

d. Install and connect new alternator coil assembly. Make certain that coil laminations are flush with bosses on fan housing.

e. Install flywheel, fan housing, and manual starter.

SECTION 7
MANUAL STARTER

TABLE OF CONTENTS

DESCRIPTION

The manual starter converts straight line motion to rotary motion necessary to crank the engine. Pawls on the starter pulley engage the flywheel ratchet when the starter rope handle is pulled. When the engine starts, centrifugal force moves the pawls outward, disengaging them from the ratchet. A recoil spring is wound as the rope is pulled and unwinds as the starter handle is returned to the starter housing.

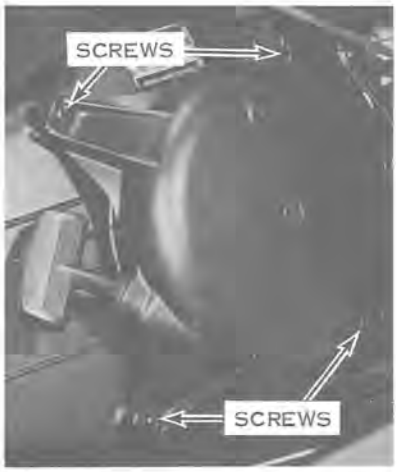

Figure 7-1

CAUTION

Never release handle at end of stroke, allowing rope to snap back. Serious damage will result.

REMOVAL AND DISASSEMBLY

a. Remove four screws (see Figure 7-1) attaching manual starter assembly to fan housing. Remove starter assembly from fan housing.

b. Pull starter rope out far enough to tie a slip knot in rope. Pry rope anchor out of starter handle (see Figure 7-2). Remove rope from anchor, and remove starter handle from starter rope.

c. Release knot, and ease starter pulley back until starter spring is fully unwound.

d. Remove starter spindle screw, and remove all components of starter pulley spindle assembly (see Figure 7-3).

e. Jar the housing, pulley side down, on bench to dislodge spring and pulley from housing.

Figure 7-2

CAUTION

It is good practice to wear safety glasses while disassembling and reassembling manual starters.

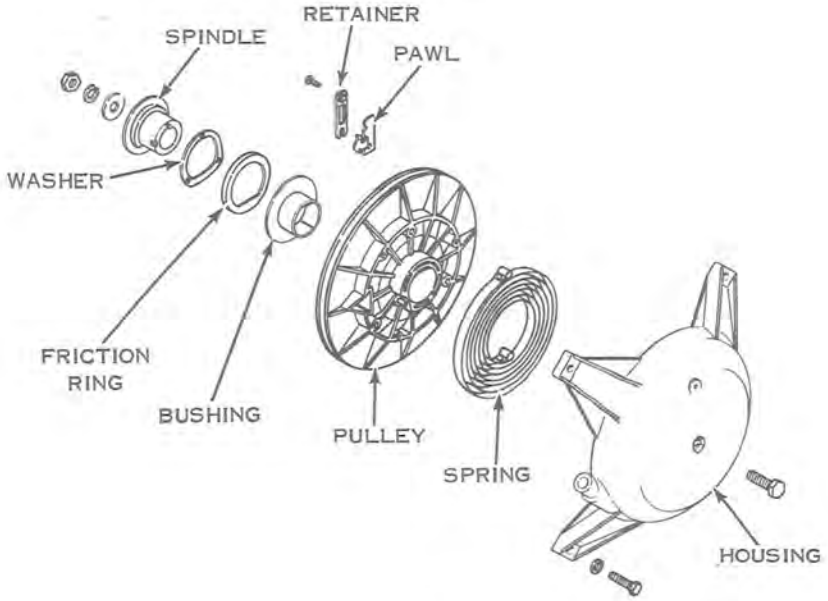

Figure 7-3

CLEANING, INSPECTION, AND REPAIR

a. Wash metal components in solvent and blow dry with compressed air.

b. Inspect spring for broken end loops or insufficient tension.

c. Examine starter pawls and ratchet for wear.

d. Inspect friction ring and spring, spindle bushing, spindle, and retainers.

e. Inspect rope and discard if frayed. Replace with starter rope cut length of 73-1/4 inches.

f. Examine pulley and housing rope eye for sharp edges and rough surfaces that might cause rope fraying. File and polish as necessary.

REASSEMBLY

a. Clamp base of starter spring winder (Service Tool #675023) in vise (see Figure 7-4). Place inside spring end loop over pulley anchor pin. Place outside spring end loop between pins on fixture base.

b. Insert handle shaft with bushing through pulley bore and into fixture base.

c. Use fixture crank to wind spring counterclockwise until tight. Release at least one turn, continuing to release until loop end spring lines up with hole drilled through edge of pulley. Slide one end of pin through holes in pulley and spring loop.

d. Carefully remove the hand crank and bushing. Lift pulley off base plate, holding spring in pulley.

e. Place pulley and spring into starter housing, making certain that spring loop is lined up exactly with pin in starter housing. Press pulley into starter housing, forcing out pin which held spring.

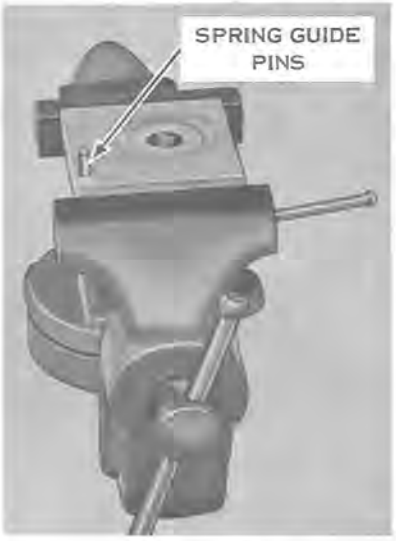

Figure 7-4

f. Apply Texaco ALL TEMP lubricant (Part #112451) to spindle and spindle bushing.

CAUTION

Many lubricants, including OMC Type A, solidify in cold weather, and will make the starter inoperative.

Install spindle, spring washer, friction ring, and bushing. Fasten with screw, washers, and nut.

g. Tie a knot in one end of starter rope. If installing a new rope, be sure length measures 73-3/4 inches. Fuse nylon strands over an open flame at each end for about one-half inch. Rope ends must be stiff to hold in pulley and in rope anchor.

h. Turn starter pulley counterclockwise to make sure starter spring is fully wound. After spring is fully wound, allow it to unwind one turn so that pulley rope hole aligns with housing rope hole. Insert rope through pulley and starter housing. Seat rope knot firmly in pulley. Tie a slip knot in starter rope and allow pulley to rewind.

i. Install pawls, retainers, and screws.

Figure 7-5

j. Thread starter rope through rope handle, using starter rope threading tool (Service Tool #378774) (see Figure 7-5). Thread rope through anchor, and press rope into channel in rope anchor (see Figure 7-6), with end of rope butting firmly against end of channel. Press rope anchor into handle. Remove slip knot in starter rope and allow pulley to rewind.

k. Pull on starter rope to make certain that pawls work properly. When starter rope is pulled, pawls should pivot to engage flywheel ratchet. On releasing rope, pawls should retract to starting positions.

l. Attach manual starter assembly to fan housing with four screws.

STARTER ROPE REPLACEMENT

Figure 7-6

a. Pull starter handle until rope is fully unwound. Lock starter pulley in position by aligning holes in housing and pulley and inserting a nail or pin through them.

b. Pry rope anchor out of starter rope handle. Disengage rope from anchor, and remove handle. Remove old rope from pulley.

c. Cut new starter rope to length of 73-3/4 inches. Fuse ends of rope over open flame for about one-half inch. Rope ends must be stiff to hold in pulley and rope anchor. Tie knot in end of rope and thread through pulley and housing.

d. Thread rope through starter handle, using starter rope threading tool (Service Tool #378774) (see Figure 7-5). Thread rope through rope anchor, and press rope into channel and rope anchor (see Figure 7-6), with end of rope butting firmly against end of channel. Press anchor into handle.

e. Remove locking pin and allow starter to rewind.

SECTION 8
ENGINE

TABLE OF CONTENTS

DESCRIPTION

The snow machine is driven by a two-cycle, twin-opposed cylinder, air-cooled engine (see Figure 8-1). This section gives instructions for removal and overhaul of the engine. Principles of two-cycle engine operation are discussed in Section 2. Trouble shooting procedures are given in Section 3.

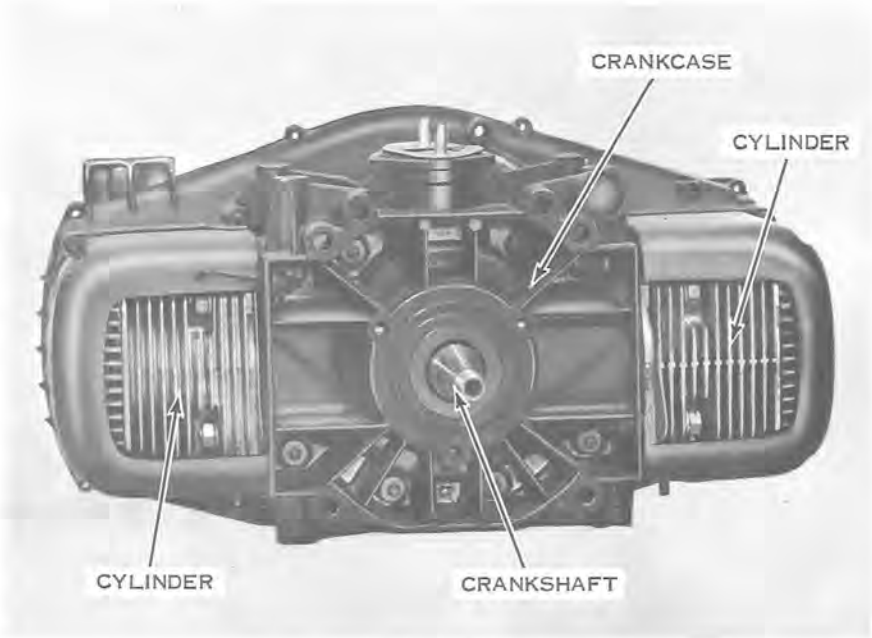

Figure 8-1

REMOVAL

a. Remove engine shroud. Disconnect wiring, and lift off shroud.

b. Remove manual starter.

c. Remove components of electrical system. Remove electric starter motor, battery, and battery box. For detailed instructions, see Section 7.

d. Remove components of ignition system. Disconnect spark plug leads, and remove spark plugs. Remove electrical panel assembly, and ignition coils. Remove fan housing, flywheel, cylinder shrouds, and rear fan housing with magneto and alternator. For detailed instructions, see Section 7.

e. Remove components of fuel system. Disconnect fuel hoses, and remove fuel pump and filter assembly, and carburetor. Remove primer push rod, intake manifold with control panel, and reed valve assembly. For detailed instructions, see Section 6.

f. Remove chain and transmission guards and disconnect brake cable. For detailed instructions, see Section 9.

g. Remove components of drive system. Remove transmission, drive chain, and drive belt. Remove primary sheave assembly. For detailed instructions, see Section 9.

h. Remove engine and frame assembly from body frame assembly.

DISASSEMBLY

a. Remove cylinder and crankcase group from engine frame assembly (see Figure 8-2).

b. Remove cylinder and stud assemblies from crankcase assembly (see Figure 8-3).

c. Remove exhaust manifold (see Figure 8-2).

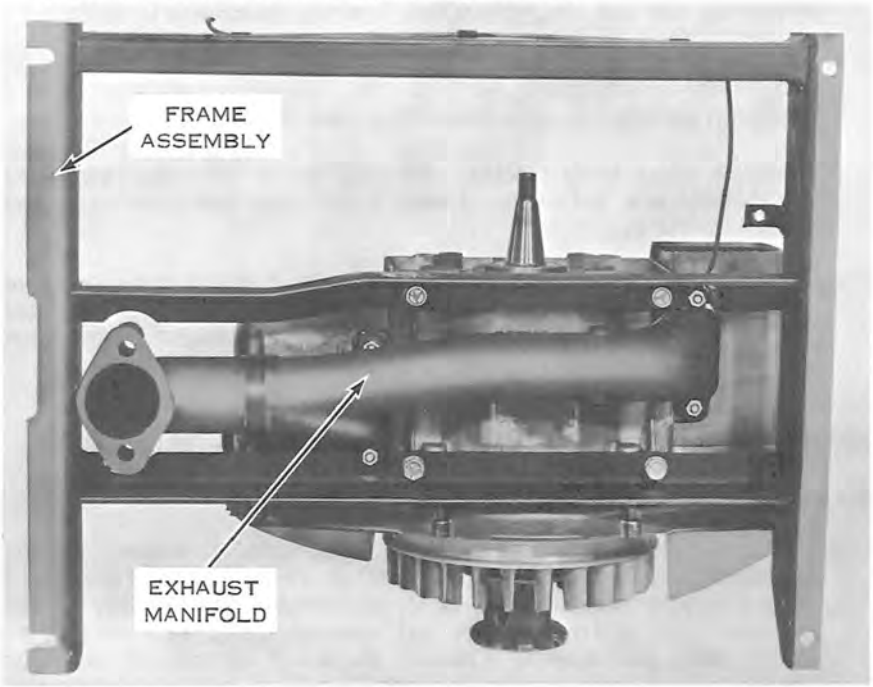

Figure 8-2

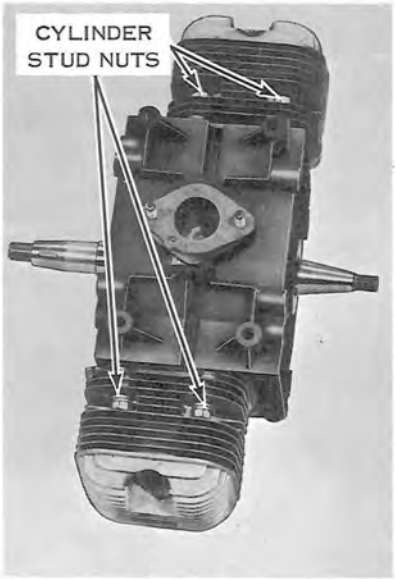

Figure 8-3

d. Remove screws from crankcase halves, and drive out taper pins toward flywheel side. Tap crankcase halves with rawhide mallet to break seal, and separate crankcase halves (see Figure 8-4).

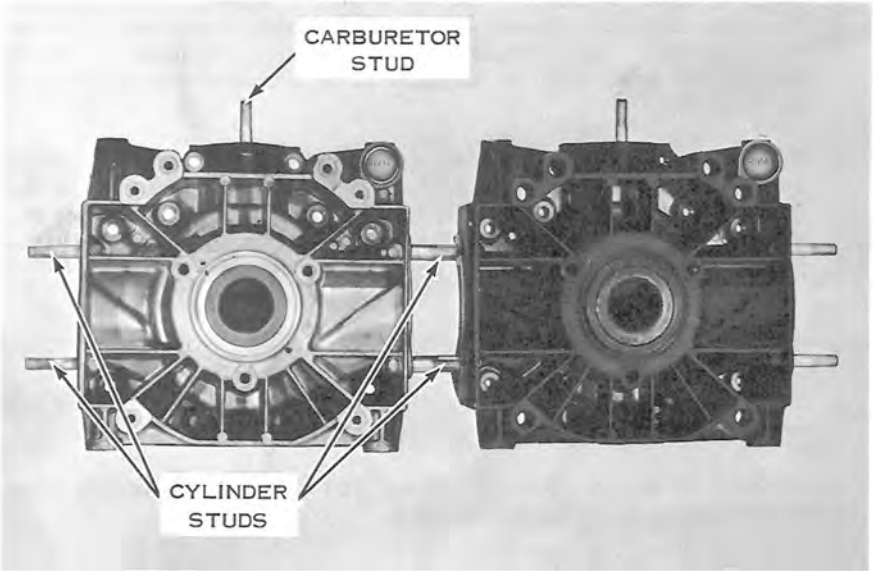

Figure 8-4

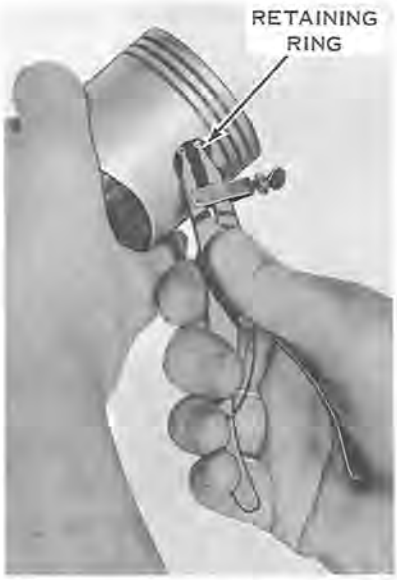

Figure 8-5

e. Remove connecting rod caps.

CAUTION

Pistons, connecting rods, and caps are matched parts and seat with the operation of the motor. Because of this, it is essential to maintain their original positions at reassembly. Mark each connecting rod and cap, piston, and bearing component to assure correct mating during reassembly. Also mark the cylinders from which they are removed.

f. Reinstall matched caps on connecting rods.

g. Remove rings from pistons. DO NOT try to save the rings even when they are not stuck. Install a complete set of new rings on every overhaul.

h. If necessary to remove connecting rods from pistons, remove wrist pin retaining rings, using Truarc No. 1 pliers (Service Tool #303857) (see Figure 8-5). Drive wrist pin through to free piston from connecting rod.

CLEANING, INSPECTION, AND REPAIR

CYLINDERS

a. Remove carbon from exhaust ports and cylinder heads. Carbon accumulation in exhaust ports restricts flow of exhaust gases and has a considerable effect on motor performance. Carefully scrape carbon from cylinder heads and exhaust ports with scraper or other blunt instrument. Exhaust ports and all exhaust passages must be free from carbon deposits to insure maximum performance.

CAUTION

DO NOT scratch gasket surfaces.

b. Check cylinder walls for excessive wear. Measure cylinder bore for size and straightness by using an inside micrometer or dial bore indicator. If wear is excessive, replace cylinders. Major portion of wear will be in port area and area covered by ring travel.

c. Break cylinder glaze by using a flexible cylinder hone to refinish cylinder walls (see Figure 8-6). With continued operation of the motor, the cylinder walls will take on a glaze which should be removed before new rings are installed. A few up and down motions of the tool should be sufficient to remove cylinder wall glaze.

Figure 8-6

GASKETS AND GASKET SURFACES

a. Discard all gaskets, seals, and O-rings. Use only new gaskets and seals in reassembly.

b. Remove all traces of dried cement and old gasket material, using trichlorethylene or lacquer thinner.

c. Check gasket faces for flatness. Under certain conditions, gasket faces may warp or spring, particularly where thin sections or

flanges are employed and are subject to temperature changes. To check for flatness, lay a sheet of No. 120 emery cloth on a surface plate or piece of plate glass (see Figure 8-7). Place part to be surfaced on emery cloth and move slowly back and forth several times in a figure 8 motion, exerting evenly distributed, light pressure. Lift part from surface plate to observe results. If surface is actually warped or sprung, high spots making contact with lapping surface will take on a dull polish, while low areas will retain their original state. To insure flatness over entire surface, continue surfacing until entire gasket surface has been polished to a dull luster. Finish surfacing with No. 180 emery cloth.

Figure 8-7

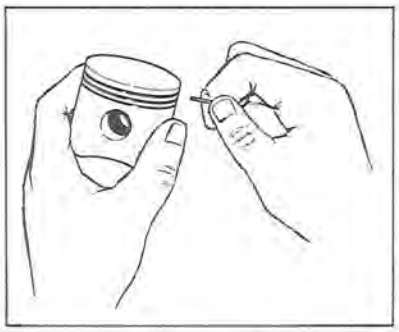

Figure 8-8

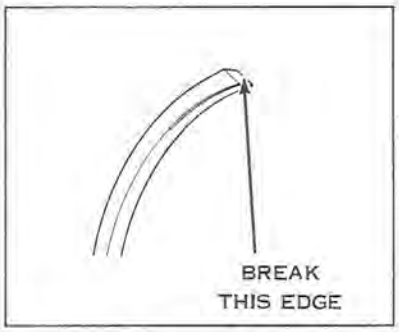

Figure 8-9

PISTONS

a. Carefully remove carbon deposits from piston head. Inspect ring grooves for carbon accumulation, excessive wear, or damage to ring seats. Carefully scrape carbon from ring grooves (see Figure 8-8), making certain that carbon clinging to bottom and sides of grooves has been thoroughly removed, without scratching or otherwise damaging the grooves. A suitable tool for cleaning ring grooves can be made by breaking an old piston ring, grinding an angle on the edge, and breaking the lower sharp edge to prevent damage to lower ring land (see Figure 8-9).

b. Check pistons for roundness, taper, excessive skirt wear, and scoring. Piston skirts must be perfectly round and unscratched to prevent entry of exhaust gases into crankcase chamber. Check piston size, taper, and roundness, using a micrometer (see Figure 8-10). Check clearance between piston and cylinder before reinstalling piston (see Figure 8-11).

c. Before installing new piston rings, check gap between ends of ring by placing ring in its respective cylinder bore (see Figure 8-12). Press ring down in bore slightly with bottom of piston to square it up. Discard and replace with new ring if gap is excessive (see Section 11, Specifications).

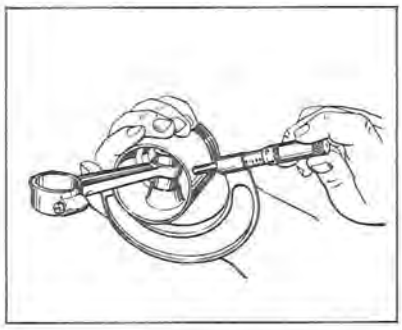

Figure 8-10

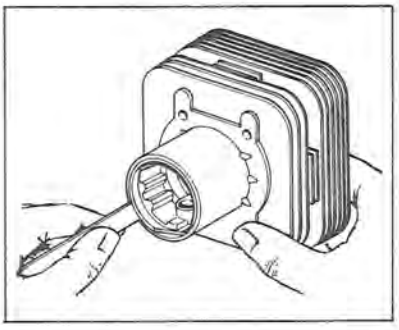

Figure 8-11

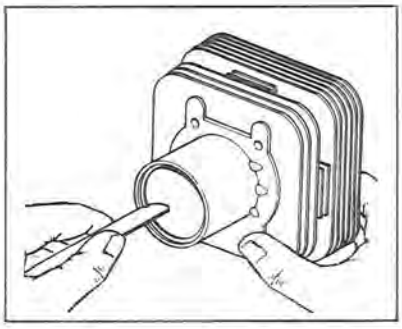

Figure 8-12

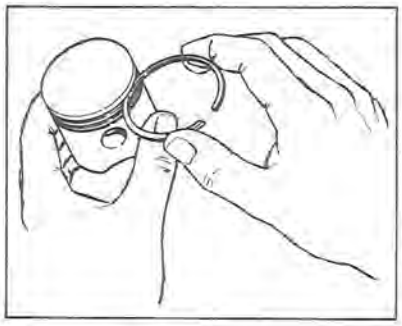

Figure 8-13

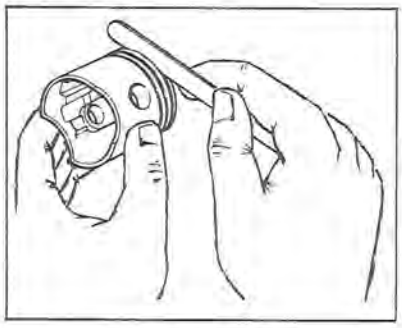

Figure 8-14

d. Check each ring in its respective ring groove for tightness or binding by rolling the ring around the piston groove (see Figure 8-13). Check for groove side clearance with feeler gage (see Figure 8-14) (see Section 11, Specifications).

BEARINGS

a. All areas where bearings are to be serviced must be free from oil and dirt. DO NOT spin ball or roller bearings before they are cleaned. Dirt in the races could cause serious damage.

b. Place bearings in a wire basket and immerse in a solvent such as Solvasol. Tank should be equipped with a screened false bottom to prevent settlings from being stirred up into the bearings. Agitate basket frequently until all oil, grease, and sludge have been loosened and can be flushed out. Bearings with especially heavy carbon deposits or hardened grease should be soaked in a separate container of solvent.

c. Use a spray gun with air filter and a cleaning solvent to flush each bearing until all dirt and residue have been removed. Turn one of the races slowly while flushing to dislodge dirt from around the balls and separators. Blow solvent out of bearings, using dry, filtered air. Be careful not to spin bearings by force of air.

d. Since dry bearings rust rapidly, lubricate them immediately in light, clean oil. Rotate them a few times to spread the oil film and place them in a clean, covered container for inspection.

e. Discard and replace any bearing that shows any of the following:

1. Rusted balls, rollers, or races.

2. Fractured ring. This may be caused by forcing a cocked bearing off a shaft or by too heavy a press fit.

3. Worn, galled, or abraided surfaces. These may be caused by too loose a fit, or a bearing locked by dirt and turning on the shaft or in the housing.

4. Badly discolored balls, rollers, or races. This is usually due to an inadequate supply of lubricant. Moderate discoloration is not a cause for discard.

ASSEMBLY OF ENGINE

Refer to Parts Catalog exploded views for correct sequence of assembly. Make no forced assemblies unless press fits are called for. Make no dry assemblies. Lubricate all moving parts with a light film of oil. Be sure all parts are clean and free from dirt and grit. Perfectly good cylinder walls, pistons, and rings can be ruined in a few minutes of operation if grit remains after assembly. Work in clean surroundings and with reasonably clean hands. Coat all bearing surfaces, cylinder walls, etc., with clean oil before assembly. NOTE: Use new gaskets and seals throughout when reassembling the engine.

PISTONS, WRIST PINS, AND CONNECTING RODS

a. Install wrist pin needle bearing in connecting rod, using an arbor press.

b. Apply a coat of oil to wrist pin, making sure the surface is clean. Place a drop of oil in each pin hole in piston.

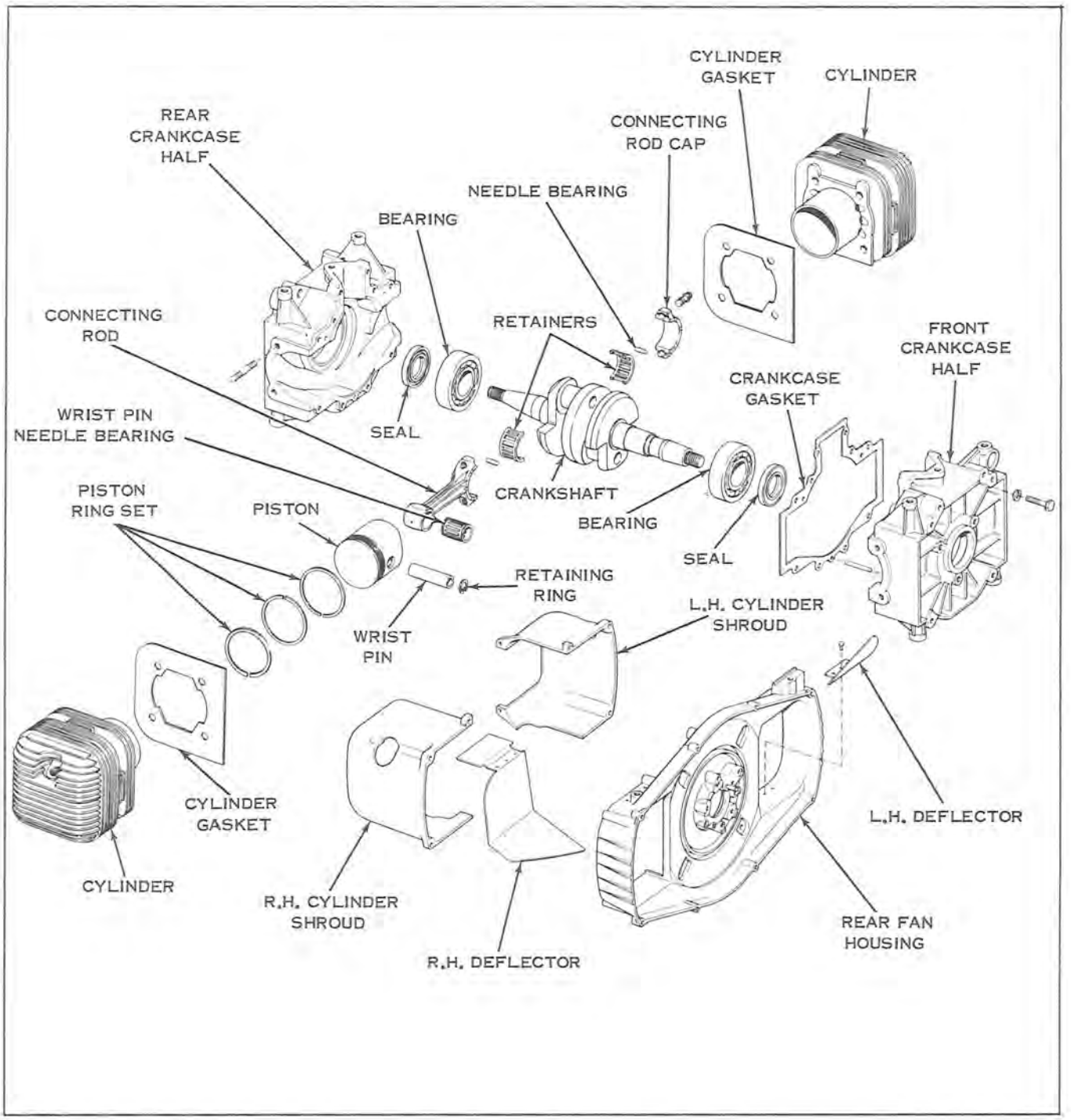
CYLINDER GASKET
CYLINDER
REAR CRANKCASE HALF
CONNECTING ROD CAP
NEEDLE BEARING
BEARING
CONNECTING ROD
RETAINERS
FRONT CRANKCASE HALF
CRANKCASE GASKET
WRIST PIN NEEDLE BEARING
SEAL
CRANKSHAFT
BEARING
PISTON RING SET
PISTON
SEAL
RETAINING RING
L.H. CYLINDER SHROUD
WRIST PIN
CYLINDER GASKET
L.H. DEFLECTOR
CYLINDER
R.H. CYLINDER SHROUD
REAR FAN HOUSING
R.H. DEFLECTOR

Figure 8-15

c. Insert wrist pin through hole in one side of piston. Oil wrist pin bearing in connecting rod. Place connecting rod in position in piston, then proceed to install the wrist pin.

d. Replace retaining rings, lettered side out, making certain they seat securely in the groove provided.

e. Check piston with micrometer to determine whether piston has been distorted during assembly. If slightly out of round, tap high side of piston with a rawhide mallet (see Figure 8-15). DO NOT use a hammer to restore original roundness. Proceed carefully and measure frequently until the piston is perfectly round.

PISTON RINGS

a. Install the piston rings on each piston. Spread each ring with a ring expander just enough to slip it over the head of the piston and into place (see Figure 8-16). Be sure that the rings fit freely in the piston ring grooves.

b. Be sure that piston rings are correctly positioned in piston ring grooves. When installed on the piston, the ring gaps must be staggered to retard compression loss.

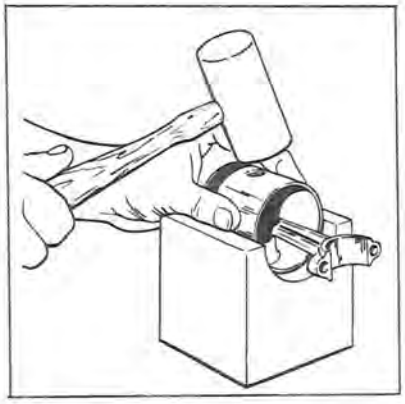

Figure 8-15

Figure 8-16

Figure 8-17

CRANKSHAFT

a. Install crankshaft journal bearings on crankshaft, using an arbor press.

b. Install crankshaft seals in crankcase halves.

c. Remove connecting rod caps from connecting rods. Apply a coat of OMC NEEDLE BEARING GREASE (Part No. 278642) to connecting rod bearing area. Assemble needle bearings (16) and retainer halves, with connecting rod and connecting rod cap, to crankpin. NOTE: Bearing retainer halves are matched. DO NOT interchange retainer halves or turn them end for end.

d. Attach connecting rod to caps. Connecting rod caps are not interchangeable, neither may the caps of the same rod be turned end for end. Match marks are provided to assure correct assembly. Draw a pencil over edge surface on both sides of rod to make certain that cap and rod are correctly aligned (see Figure 8-17). If misaligned, offset edge will be felt with pencil point. Tighten connecting rod cap screws together. If alignment is satisfactory, tighten connecting rod cap screws to specified torque. Check for binding. Bearings and retainers must float freely on crankpins.

e. Run a fine bead of SEALER 1000 on gasket surface of crankcase halves. Place a new gasket on one crankcase half and coat with Perfect Seal. Assemble crankcase halves to crankshaft assembly. Crankcase must be heated to 325° to allow easy entry of bearing.

f. Replace crankcase taper pins, driving in carefully with a hammer from flywheel side. Replace all crankcase screws and tighten to specified torque.

g. Install cylinders, using new gaskets. Use a hinged ring compressor to install pistons in cylinders. Tighten nuts in correct sequence to specified torque (see Figure 8-18). NOTE: Retorque cylinder screws after motor test has been completed and motor has cooled off.

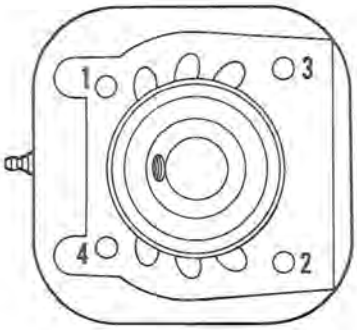

Figure 8-18

h. Assemble exhaust manifold assembly to cylinders, using new gaskets.

i. Attach cylinder and crankcase group to engine frame assembly.

INSTALLATION

a. Attach engine and frame assembly to body frame assembly. Attach exhaust manifold to muffler, using a new gasket.

b. Assemble power group, including primary and secondary sheaves, drive belt, and drive chain. For detailed instructions see Section 10.

c. Install reed valve assembly, intake manifold, carburetor, and air cleaner. For detailed instructions, see Section 5.

d. Install steering column assembly. Connect control linkages and adjust. Check ski alignment as described in Section 10.

e. Install drive belt and chain guards, and left hand foot rest.

f. Install electrical panel assembly, ignition coils, and spark plugs. Connect spark plug leads. Install rear fan housing with magneto and alternator, flywheel, and front fan housing. For detailed instructions, see Section 7.

g. Install battery box, battery, and starter motor. Adjust belt tension as described in Section 7.

h. Install manual starter. Reconnect fuel lines and all electrical connections.

i. Replace engine shroud.

BREAK-IN

a. Make certain that when an engine is returned to service following an overhaul, the owner is advised to follow break-in procedures as described in the Owner's Manual exactly. This will allow the internal moving parts to seat themselves, thus greatly prolonging engine life.

b. For the first tankful of fuel the vehicle must be operated at reduced speeds. After the first hour of operation, retighten exhaust manifold clamp.

c. Allow engine to warm up before putting vehicle in gear. Start out slowly; avoid jack-rabbit starts. DO NOT overspeed engine.

d. Observe fuel mixing precautions as described in Section 6. Check for oil flow from chain oiler.

SECTION 9
TRANSMISSION AND STEERING

TABLE OF CONTENTS

DESCRIPTION

This section gives complete service instructions on the snow machine propulsion system, including the transmission, track and suspension, steering, and skis. A brief discussion of the operation of the transmission is included in Section 2. Care of the track and lubrication of the transmission and steering system are covered in Section 10.

TRANSMISSION

REMOVAL

a. Remove engine shroud. Remove left foot rest, and transmission and chain guard (1965 models) or guards (1966 models).

b. Disconnect brake cable (see Figures 9-1 and 9-2).

c. Remove two screws attaching mounting pedestal to engine frame (see Figures 9-1 and 9-2). Remove secondary sheave assembly, drive chain, and drive belt.

d. Remove manual starter. Holding ratchet mount to prevent crankshaft from rotating (see Figure 9-3), remove primary sheave assembly by unscrewing from crankshaft (see Figure 9-4). NOTE: Right hand thread is used on PTO end of crankshaft.

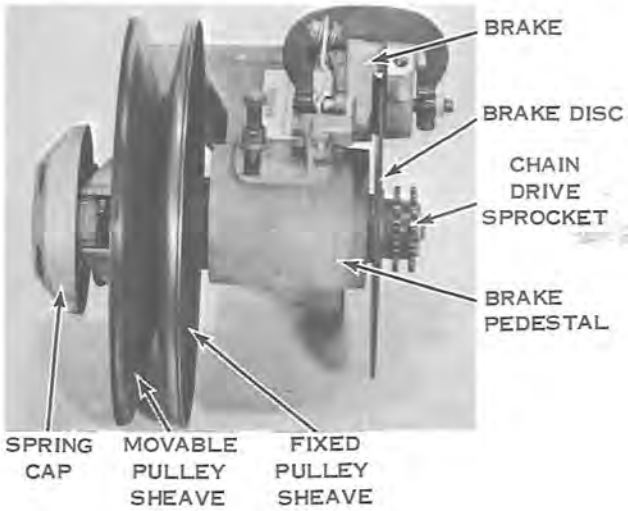

Figure 9-1. (1965)

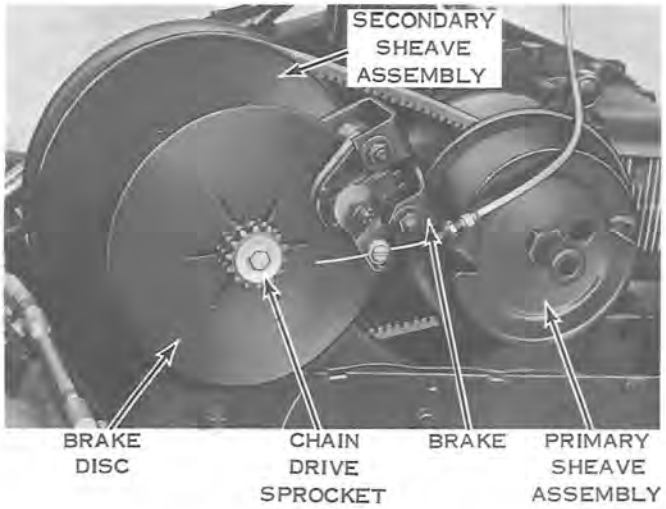

Figure 9-2. (1966)

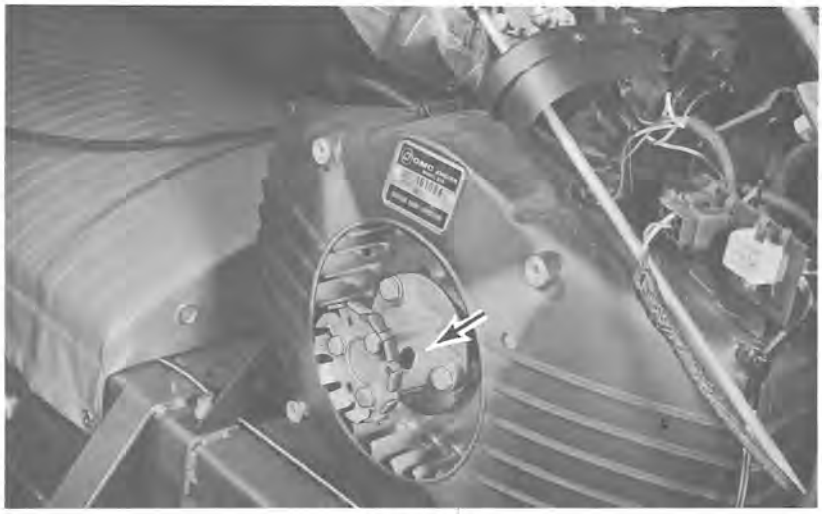

Figure 9-3

DISASSEMBLY

a. Unscrew neutral shift nut from main shaft and sheave assembly, and remove neutral lock-out assembly (see Figure 9-5). Remove end cap and sliding sheave from main shaft.

b. Remove two screws attaching brake assembly to mounting pedestal (see Figure 9-6). Disassemble brake, if necessary, as described below.

c. Remove drive chain adjusting screw (see Figure 9-6). Remove sprocket screw, washer, and sprocket, brake disc, and Woodruff key (see Figures 9-7 and 9-8). Pull shaft out of pedestal. NOTE: Magnisium pedestal is used on 1966 models.

d. Remove fixed pulley half, key, and retainer, using No. 2 Tru-Arc pliers (Part No. 303858). Remove key and movable pulley half.

e. Remove pulley spring. Remove cap retaining ring and spring cap.

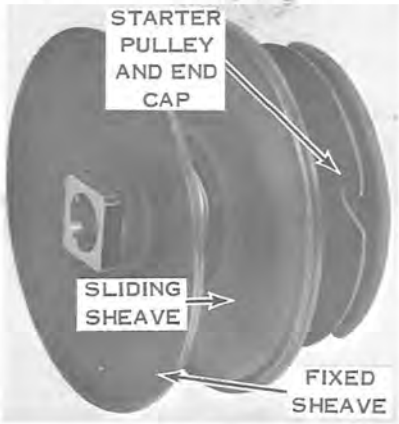

Figure 9-4

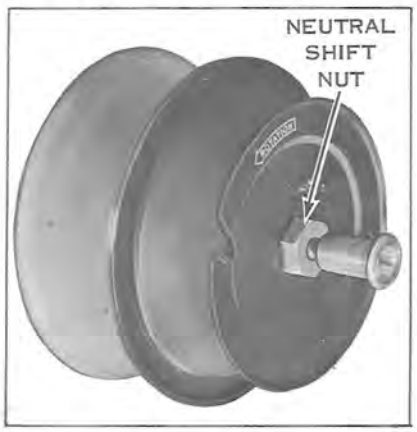

Figure 9-5

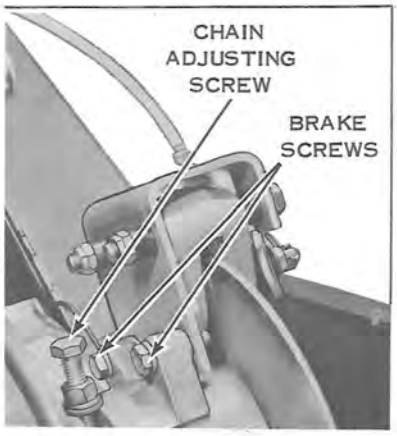

Figure 9-6

CLEANING, INSPECTION, AND REPAIR

a. Clean all parts with a cleaning solvent such as Solvasol and blow dry with compressed air.

b. Inspect main shaft and sheave assembly splines for wear.

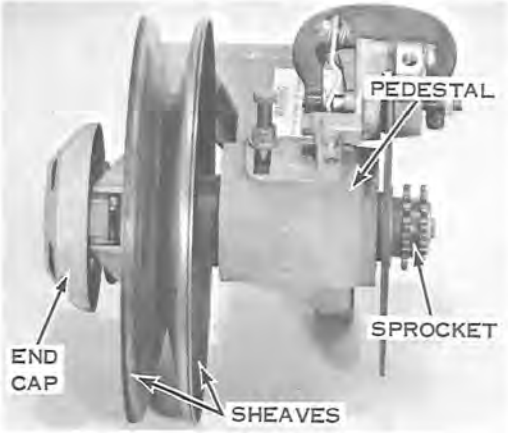

Figure 9-7

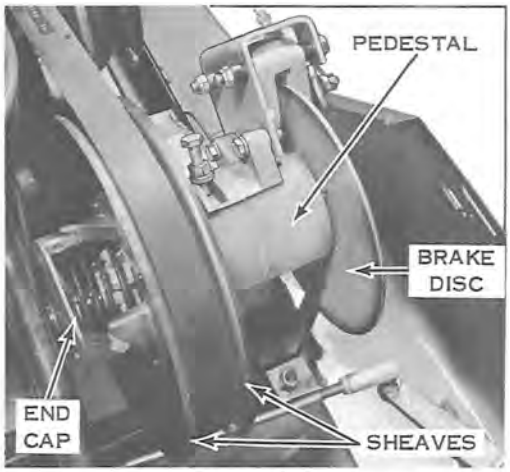

Figure 9-8

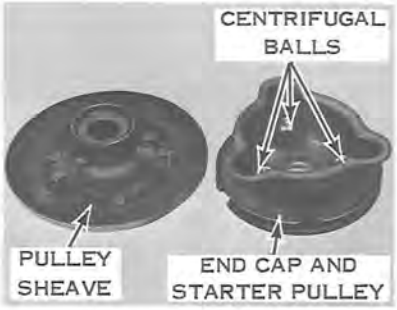

Figure 9-9. (1965)

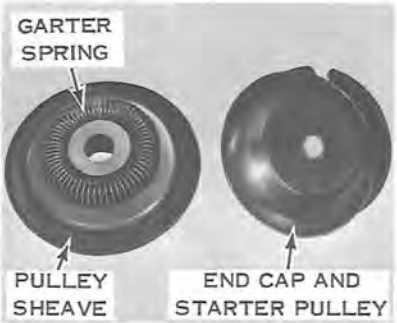

Figure 9-10. (1966)

c. Turn bearings by hand; discard any which do not rotate smoothly or which have excessive play.

d. Inspect nylon shoes for wear and replace if necessary.

e. Inspect drive belt. A belt measuring less than one inch across width or outer surface must be discarded and replaced.

f. Clean drive chain in a petroleum solvent such as kerosene or Solvasol. When thoroughly clean, soak chain in SAE 20 or SAE 30 lubricating oil for about 24 hours. Wipe off excess oil.

REASSEMBLY

Primary Sheave

a. Place neutral lockout balls in position in main shaft, using heavy grease to retain in position.

b. Place centrifugal balls (1965 models) in end cap and starter pulley assembly (see Figure 9-9). Place garter spring (1966 models) on sliding sheave (see Figure 9-10).

c. Install drive belt bearing, spring cup, and spring over main shaft and sheave assembly. Place end cap and sliding sheave assembly over main shaft and sheave assembly. Install neutral shift lockout.

CAUTION

Make certain that neutral lockout balls remain in position during this operation.

d. Install main shaft and sheave assembly on crankshaft. Rotate shaft and sheave assembly in a clockwise direction to tighten. Install manual starter.

Secondary Sheave

a. Install No. 8 Woodruff key in secondary sheave shaft. Place spring cap into position over key and install retaining ring.

b. Install nylon shoes in spring cap (see Figures 9-11 and 9-12). Place spring and movable pulley half on shaft. Install retaining ring. NOTE: (1965 models) Shoes must fit in two slots on movable pulley half.

c. Place No. 10 Woodruff key in position on secondary sheave shaft. Install fixed pulley half.

d. Assemble eccentric, spacer, and bearings to shaft. Install secondary sheave shaft and eccentric in mounting pedestal. Place No. 10 Woodruff key in shaft (see Figure 9-13). Install brake disc, sprocket, washer, and screw.

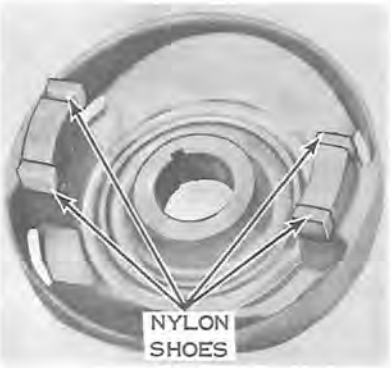

Figure 9-11. (1965)

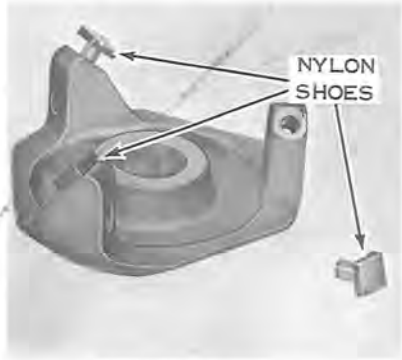

Figure 9-12. (1966)

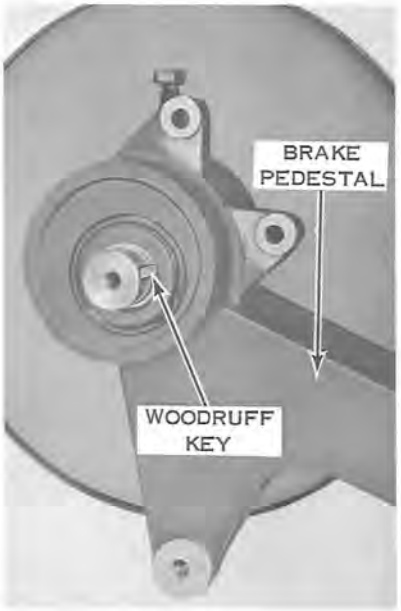

Figure 9-13

e. Place secondary assembly in position on frame assembly and attach with screw and bolt. Install brake and connect brake cable.

f. Adjust drive chain tension as described under "Drive Chain Replacement." Install transmission and drive chain guard (1965) or guards (1966), and left foot rest. Replace engine shroud.

DRIVE CHAIN REPLACEMENT

a. Remove left-hand foot rest and drive chain guard.

b. Loosen eccentric screw lock nut (see Figure 9-14), and move eccentric screw counterclockwise to loosen chain. If chain does not have adequate slack for removal, loosen rear transmission mounting screw, and remove front transmission mounting screw. This will allow transmission to pivot downward, increasing chain slack.

c. Install new drive chain. To prolong chain life, chain should be soaked for about 24 hours in SAE 20 or SAE 30 lubricating oil.

Figure 9-14

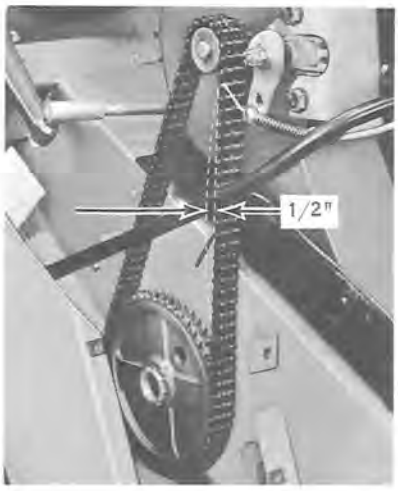

Figure 9-15

Figure 9-16

d. Adjust chain tension by moving eccentric screw clockwise to tighten chain, or counterclockwise to loosen chain. Chain tension is correct when chain slack is one half inch at center of chain (see Figure 9-15). Retighten eccentric screw lock nut.

e. Install chain guard and left-hand foot rest.

DRIVE BELT REPLACEMENT

a. Remove engine shroud and transmission guard.

b. Grasp top of belt approximately midway between large and small sheaves. Pull up on belt, spreading the two secondary sheaves as far apart as possible.

c. Slide top edge of belt over secondary sheave closer to steering column (movable sheave).

d. Push bottom half of belt from between sheaves so that the two sheaves move as close together as possible. Work bottom of belt out from under two sheaves.

e. Move belt between end cap and steering column, then between end cap and engine. Pass belt around primary sheave, and remove belt from vehicle. NOTE: Rotating secondary sheave assembly so that flats on end cap (1966 models) are parallel with steering column and engine will facilitate belt removal and replacement. NOTE: A belt measuring less than one inch across the width or outer surface must be discarded and replaced. Worn belt may be retained and used as a spare.

f. Loop one end of replacement belt around primary sheaves. Move belt between end cap and engine, then between end cap and steering column.

g. Work bottom of belt under and around secondary sheaves as much as possible.

h. Spread secondary sheaves by hand.

CAUTION

DO NOT pry sheaves apart forcibly with tools. Sheaves can be spread by holding fixed pulley half, and rotating movable half toward rear of vehicle. This will allow pulley to move up ramps in end cap.

i. Continue to work belt around sheave. Install transmission guard and engine shroud.

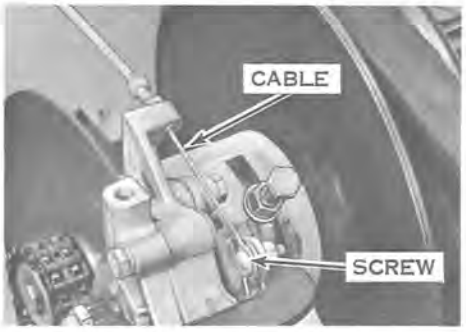

Figure 9-17. (1965)

BRAKE

REMOVAL

a. Remove engine shroud and transmission guard.

b. Unhook brake spring. Release brake adjustment screw. Disconnect brake control cable (see Figures 9-17 and 9-18).

c. Remove two inside brake mounting screws. Remove brake from mounting pedestal.

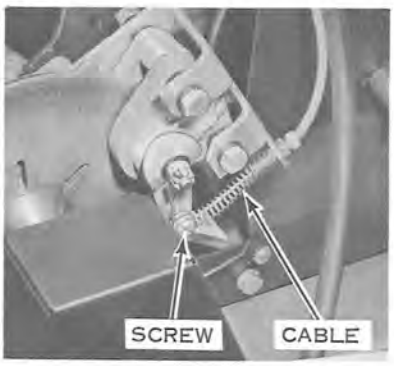

Figure 9-18. (1966)

REPAIR

a. Disassemble brake assembly as required, noting relative positions of components to assure correct reassembly (see Figures 9-19 and 9-20).

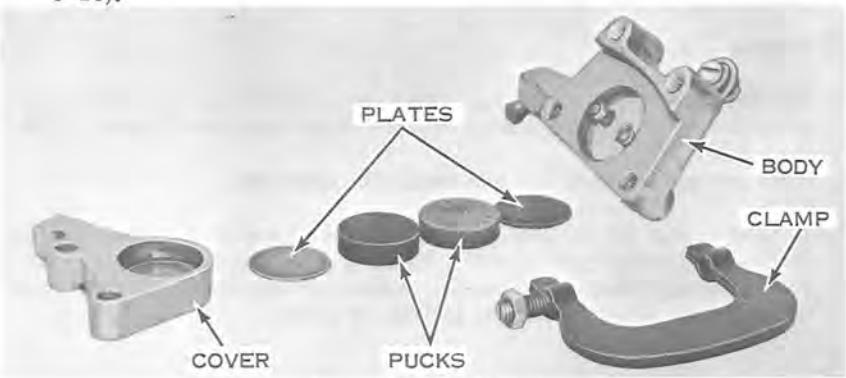

Figure 9-19. (1965)

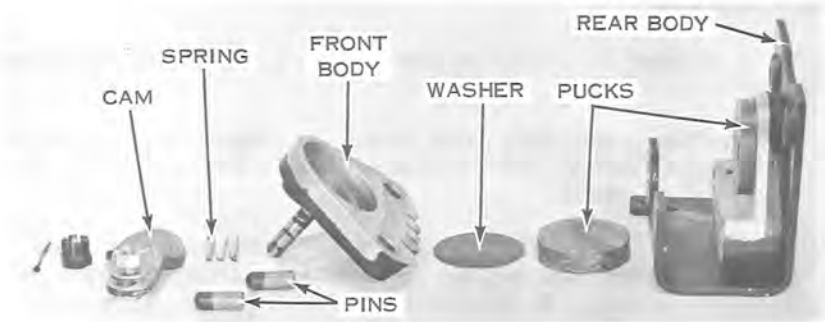

Figure 9-20. (1966)

b. Replace pucks if worn to one-half original thickness.

CAUTION

Keep all oil and grease from puck surfaces.

INSTALLATION

a. Reassemble components of brake assembly.

b. Attach assembled brake to mounting pedestal with screws. Reconnect brake control cable and brake spring.

c. Adjust brake as described below. Replace transmission guard and engine shroud.

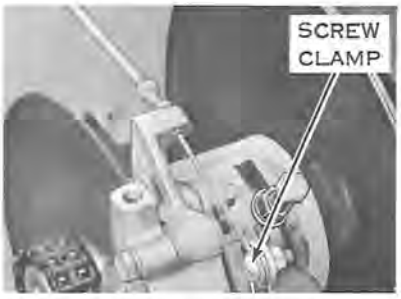

Figure 9-21. (1965)

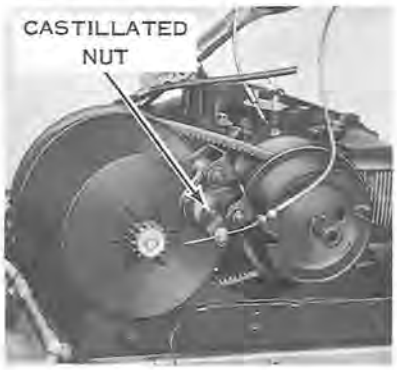

Figure 9-22. (1966)

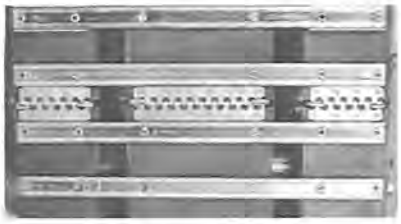

Figure 9-23

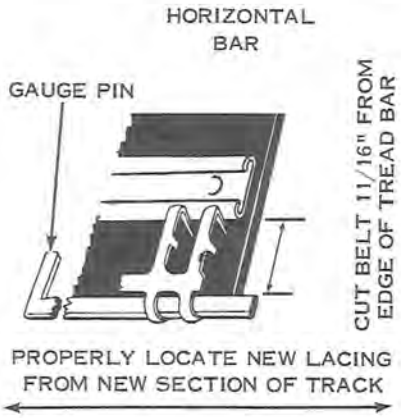

Figure 9-24

Figure 9-25

ADJUSTMENT

1965 Models

a. Tighten stud clamp until brake is fully on, then back off screw one full turn and lock.

b. Make sure end of cable fitting is flush with body. Thread cable through fitting and screw clamp (see Figure 9-21).

c. Move cam to apply brake, and tighten screw clamp. NOTE: Brake will now be on with hand lever in "OFF" position.

d. Turn fitting in toward cam until brake releases. Set brake by turning fitting so that when hand lever is in "LOCK" position, brake is fully on lock fitting.

1966 Models

a. Tighten brake by removing cotter pin and turning castillated nut until there is a slight drag on the brake disc (see Figure 9-22).

b. Turn nut one notch to left and reinstall cotter pin.

c. If hand brake lever does not have proper amount of travel, loosen lock nut. Turn adjusting screw to right to increase travel. NOTE: Before completing adjustment, make certain there is sufficient movement of lever to permit locking of brake.

TRACK AND TRUCKS

TRACK SPLICING

a. Block up rear of vehicle to free track. Loosen track adjustment screws.

b. Remove hinge pins from track lacing (see Figure 9-23). Remove track from vehicle. Lay track in extended position on flat surface with cleat side down.

c. Place repair section over damaged area to determine section to be replaced. Mark and cut out desired area using a carpenter's square to assure a perpendicular cut. NOTE: Track repair section must not be joined to original lacing. If damaged, bring both ends of track together, mark, and cut out section including lacing.

d. Cut track 11/16 inch from tread bars. Coat raw edge with rubber adhesive. NOTE: Track should be checked periodically for cuts and bruises. Coating these with rubber adhesive will lengthen life.

e. Place short section of lacing over outside section of track and insert pin. NOTE: Horizontal bar (see Figure 9-24) on lacing (1965) must be on top face of track. Make absolutely certain new lacing is positioned to allow repair section to align with main track.

f. Attach lacing to track (see Figure 9-25). Join repair section to main track, using hinge pins provided.

g. Thread track into proper position on vehicle. Join ends of track with hinge pins provided. Adjust track tension as described under "Track Tension Adjustment."

TREAD BAR REPLACEMENT

a. Replacement is necessary if tread bars are broken or damaged. Remove track as described under "Belt Splicing."

b. Remove track and lay in extended position with top face of belt (cleat side) up.

c. Drill out rivets holding damaged or broken tread bar in place, using 1/4 inch drill.

d. Install new tread bar. Reinstall track as described under "Track Splicing."

TRACK TENSION ADJUSTMENT

a. Loosen adjusting bolt and jam nuts (see Figures 9-26 and 9-27).

b. Turn trunnion bolts to tighten or loosen track. Track must have 3/4 inch total slack between track and center track wheels. NOTE: Be certain to adjust both trunnions so that track tension is equal on both sides.

TRACK ALIGNMENT ADJUSTMENT

a. Proper track alignment is essential to minimize rubber sprocket tooth wear. NOTE: Alignment can be seriously altered by improper track tension adjustment.

b. Block up rear of vehicle, and place front edges of skis against stationary object.

c. Start engine and run at idle speed, with transmission engaged, allowing track to turn while free. Rubber sprocket teeth must be centered in their slots.

d. If track must be adjusted to right, tighten left-hand trunnion adjusting bolts as described under "Track Tension Adjustment." If track must be adjusted to left, tighten right-hand trunnion adjusting bolts. NOTE: Recheck track tension after track alignment has been completed.

FRONT AND REAR AXLES

REMOVAL AND DISASSEMBLY

a. Remove track as described under "Track Splicing." Remove drive chain as described under "Drive Chain Replacement."

b. Loosen setscrews in axle bearing collars (see Figure 9-28). Rotate collars to free from axle (see Figure 9-29). Remove screws attaching bearing mount assemblies to frame. Remove axles, and disassemble axle and sprocket wheel assemblies. NOTE: Chain drive sprocket must be removed before removing front axle (see Figure 9-30).

c. Sprocket wheels are attached to front and rear axles with roll pins. Drive out roll pins to remove sprocket wheels from axles. NOTE: (1966 models) Sprocket hubs are magnesium and shrink fitted to axles. DO NOT use flame to heat hubs.

Figure 9-26

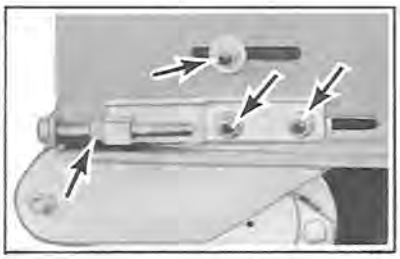

Figure 9-27

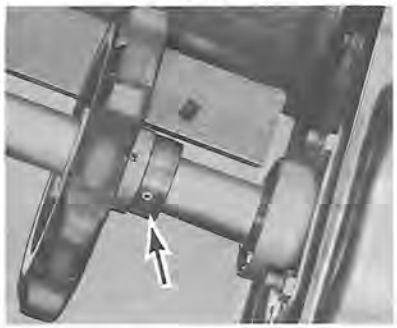

Figure 9-28

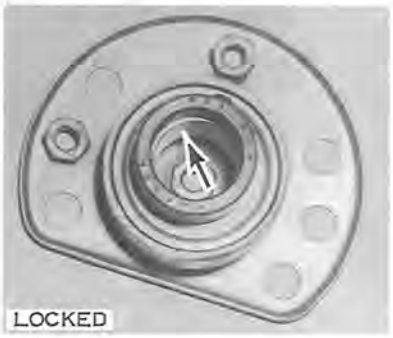

Figure 9-29

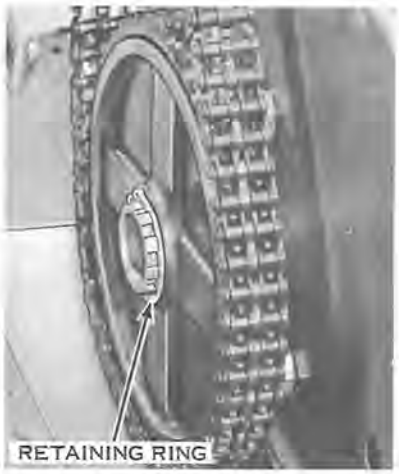

Figure 9-30

CLEANING, INSPECTION, AND REPAIR

a. Hub and axle bearings are sealed and cannot be relubricated. If there is evidence that bearings are worn, or do not turn smoothly and freely, bearings must be replaced.

b. Inspect sprocket wheel assemblies, especially front axle sprocket wheel assemblies, for wear, and replace if necessary.

ASSEMBLY AND INSTALLATION

a. Assemble sprocket wheel assemblies to front and rear axles, and fasten in position with roll pins. NOTE: (1966 models) Sprocket hubs are shrink fitted to axles and must be heated before installation. Heat to 325° F. on a hot plate (DO NOT use open flame on magnesium hubs) for two minutes before installing.

b. Place eccentric collars on axles. Install bearings in bearing mounts, if removed.

c. Place axles into position in bearing mounts, and attach bearing mounts in position with screws.

d. Rotate eccentric collars to lock bearings to axles, and secure collars in position with setscrews. Use a drop of Grade A Loctite to prevent setscrews from loosening.

e. Install chain drive sprocket on front axle, and replace drive chain as described under "Drive Chain Replacement."

TRUCK ASSEMBLY AND INSTALLATION

a. Note that truck assemblies are similar, but not identical (see Figure 9-31). Front truck assembly has widely spaced hubs and tires on both axles. Center truck has three axles.

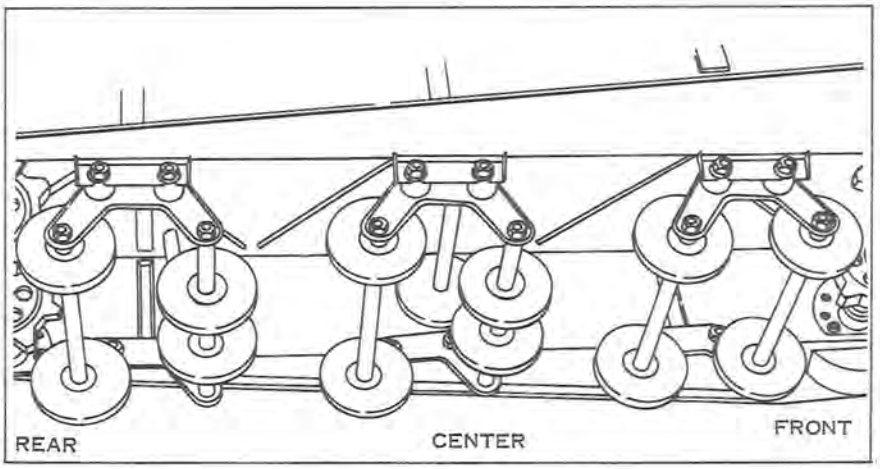

Figure 9-31

b. Place bearings in hubs, and install retaining rings. Attach bearing and hub assemblies to truck axles.

c. Assemble axles to brackets, and attach with nuts and lockwashers. Assemble rubber mounts to brackets.

d. Attach assembled truck assemblies to frame assembly. Install track as described under "Track Splicing."

STEERING AND SKIS

REMOVAL

a. Support front end of vehicle to remove front end of vehicle from skis.

b. Remove nuts and lockwashers from tapered lock pins (see Figure 9-32). Remove pins from tie rods. NOTE: To avoid damaging threads while removing pins, thread nuts onto pins until flush with threaded ends of pins. Drive pins out by tapping on nuts with hammer.

c. Remove steering arms from ski columns. Remove ski and spring assemblies, with columns, from frame assembly. Disassemble springs, if required, for servicing.

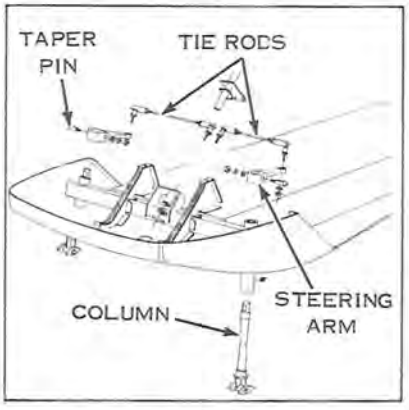

Figure 9-32

CLEANING, INSPECTION, AND REPAIR

a. Remove all dirt and old grease from ski columns and from inside ski column brackets.

b. Inspect ski column thrust washers and replace if necessary.

c. Inspect steering column bushing and replace if worn.

d. Inspect ski runners and replace if worn.

e. Inspect ski springs for cracks.

ASSEMBLY AND INSTALLATION

a. Reassemble skis, springs, and columns, if these were disassembled.

b. Place ski and column assemblies in position in frame assembly. Check lubrication of ski columns. NOTE: DO NOT interchange right and left ski columns (see Figure 9-33).

c. Attach steering arms to ski columns with taper pins. Tighten taper pin nuts securely. Adjust ski alignment as described below.

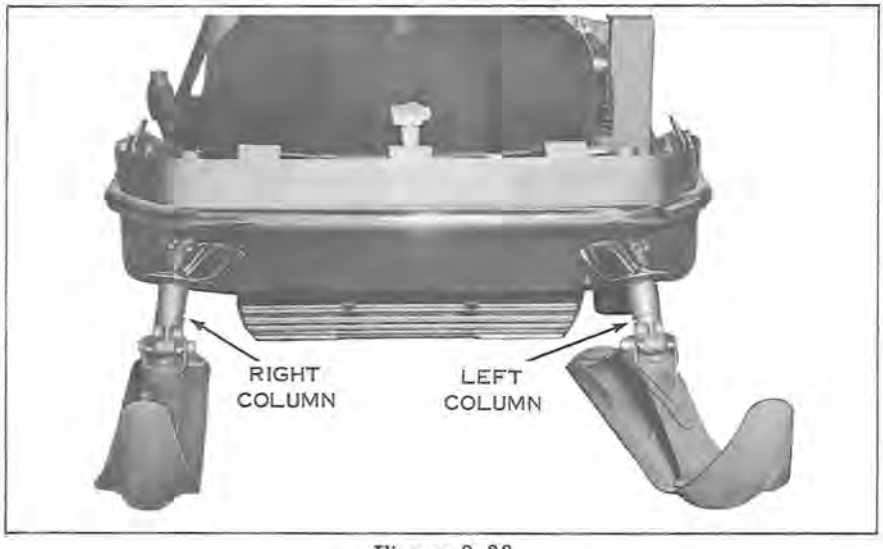

Figure 9-33

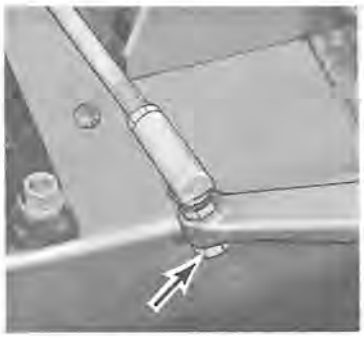

Figure 9-34

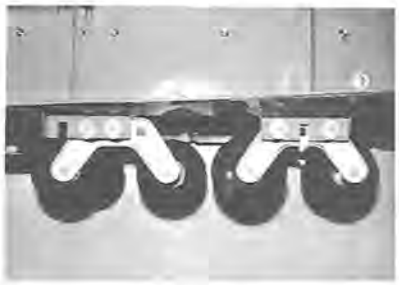

Figure 9-35

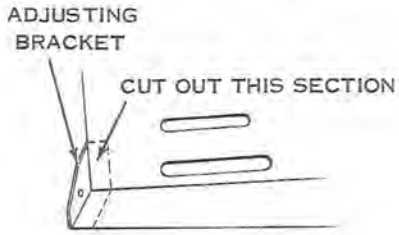

Figure 9-36

Figure 9-37

SKI ALIGNMENT

a. Ski alignment is necessary when skis are not parallel with each other and the vehicle body, with the handle bar in the normal straight-driving position.

b. To align skis, remove engine shroud. Place steering arm in normal straight driving position.

c. Remove nut and washer from steering arm (see Figure 9-34). Loosen locking nut.

d. Turn ball joint clockwise to toe ski out, or counterclockwise to toe ski in.

e. Reassemble when skis are parallel with each other and with vehicle body

CONVERSION KIT - INSTALLATION INSTRUCTIONS (For modification of 1965 snow machines - Models C-1400, E-1400, J-1400)

a. Turn vehicle upside-down or suspend off ground so that track is easily accessible. Remove track, rear axle, dollies and snow deflector. Back rest support may also be removed.

b. Remove rubber mounts from dollies. NOTE: Three rubber mounts will be removed from each side of each dolly. However, only two rubber mounts per side will be installed for new style track set-up.

c. Install four new style rubber mounts on rear dolly. These mounts should be installed in rear two holes of bracket (see Figure 9-35).

d. Install four new style rubber mounts on center dolly. These mounts should be installed in front and rear holes of bracket (see Figure 9-35).

e. Remove bracket from side of front dolly and replace with new style bracket included in kit. Install four new style rubber mounts in front and rear holes of the bracket (see Figure 9-35).

f. With a fine hacksaw, cut out section (approximately 7/8 inch x 2-1/2 inch) in rear corners of frame (see Figure 9-36) to remove adjusting bracket.

g. Clean paint from area to be covered by bracket and plate (see Figure 9-37). Situate bracket and plate against frame. Match top and bottom of slots in bracket and plate with slots in frame. Bracket should extend 7/32 inch past end of frame. Attach plate to frame 7/32 inch past end of the frame. Attach plate to frame with seven fillet welds (five on outside, two on inside). Inside welds should be sanded flush with frame.

h. Find center of reinforcing angle bracket by measuring from outside of frame to opposite side (distance A to B - Figure 9-38). With a combination square mark center line on reinforcing angle bracket. Using screw hole already there as a base, enlarge hole with a file until it reaches the measurement 13/32 inch x 17/32 inch (see Figure 9-38). Make sure that the inscribed center line runs through center of hole (see Figure 9-38, inset). NOTE: Existing hole in reinforcing angle bracket may not be in exact center of frame. Slot in taillight bracket must also be filed out until a circle 13/32 inch in diameter is formed. It may be necessary to anneal this bracket, as it has been factory hardened.

i. Install new axle and sprocket assembly; the following procedure is recommended.

1. Assemble setscrews to collars (with Locitite sealant).

2. Slip collars over ends of axle and sprocket assembly (cam recess to outside).

3. Install mounting plate assemblies over ends of axle and sprocket assembly.

4. With spring hanging loose (see Figure 9-39) install axle and sprocket assembly in machine with screws through slots in frame. Install adjusting brackets over screws (see Figure 9-40) and attach washer and nuts loosely.

5. Install rear frame support (see Figure 9-39) with screws and nuts provided. NOTE: Locknut on track adjusting screw must be salvaged from old style.

6. For proper bearing alignment, rear axle must be parallel with front axle. Measure distance from front axle to rear axle on both sides of the machine and equalize this distance. When right and left sides are equal, snug up nuts.

7. With spring still loose, shove axle up until it hits stop (see Figure 9-39). Measure distance from inside of mounting plate to inside of sprocket. This distance should be equalized on right and left sides. When equal, tighten screws on each side of flangette bearing retainer. NOTE: It will be possible to tighten only two screws on each side while axle is pushed up to stop position. When these are tight let axle down and tighten other screws. Be sure that there is no binding between mounting plate and movable arm. Make certain that axle turns freely.

8. Slide collar into position against flangette bearing retainer. With hand, apply pressure to collar and and twist in direction of track rotation until it slips into a locked position. Use a hammer and punch to tighten collar. Use Allen wrench to tighten set screws.

9. Put end of spring into position.

10. Check all nuts and bolts to be sure they are tight.

j. Replace front and center dollies in normal slots. Replace rear dolly in front two slots of bracket (see Figure 9-35).

k. Install new track and adjust.

l. Install new skis.

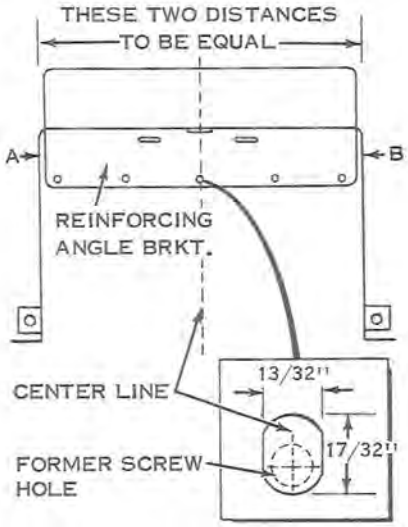

Figure 9-38

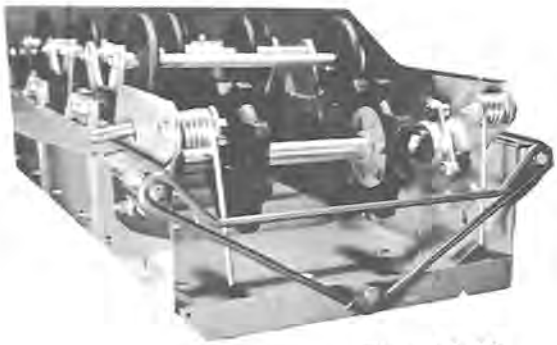

Figure 9-39

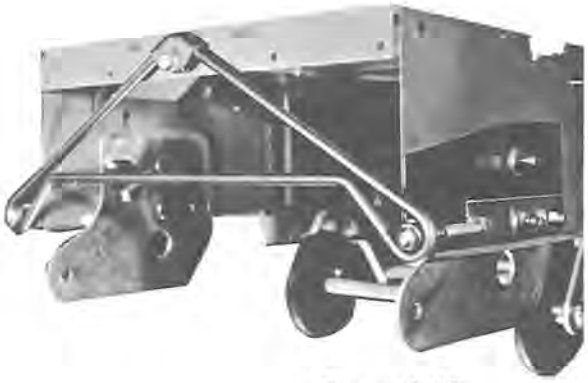

Figure 9-40

SECTION 10
MAINTENANCE

TABLE OF CONTENTS

ENGINE LUBRICATION

Since fuel vapors are first compressed in the crankcase of the two-cycle engine, the most practical method of lubrication is by mixing the lubricating oil with the gasoline. As the mixture of oil and gasoline enters the crankcase, the gasoline is vaporized, leaving the oil to lubricate the bearings and other moving parts. Eventually the oil reaches the combustion chamber where it is burned and discharged through the exhaust ports. In this way the fuel mixture conveys to the engine's moving parts a metered amount of oil in proportion to the speed of the engine.

Both optimum performance and lubrication depend on maintaining the correct ratio between gasoline and oil in the fuel mixture. The use of too little oil leads to premature wear and early breakdown. A fuel mixture richer in oil than recommended is not only wasteful but will contribute to faulty performance, and to excessive carbon accumulation in the cylinders and on the spark plugs. Frequent spark plug replacement can often be traced to an excess of oil in the fuel mixture. Instructions for the mixing of fuel during break-in and normal operation as given here and in the Owner's Manual should be followed exactly.

FUELS AND LUBRICANTS

The use of a reputable brand of SAE 30 grade automotive engine oil, and a non-premium gasoline of like quality, is recommended. The oil container should be marked Service MM or Service MS. Additional markings, such as ML-MM, DG, or DS indicate oils for other applications and should be avoided. Avoid the use of low-priced, light duty oils (container marked only with ML designation) or multiple viscosity oils, such as SAE 10W30. DO NOT USE OUTBOARD MOTOR OIL.

The use of higher priced, premium gasolines is not recommended; the compression ratio of the engine is not high enough to warrant the use of such fuel. In addition, the lead and other additives which are used to increase the octane rating of premium gasolines, or otherwise improve performance, may shorten spark plug life.

The use of additive compounds, such as tune-up compounds, tonics, friction reducing compounds, etc., is discouraged. OMC Accessories Engine Cleaner and OMC Accessories Break-In Lubricant should be used as necessary according to instructions.

FUEL BLENDING

To avoid unnecessary cylinder scoring and premature engine wear, it is important that the gasoline and oil be properly mixed prior to putting the fuel in the tank. This is especially true in zero or sub-zero climates. Unless the fuel and oil are properly mixed, the engine could operate on a mixture which is too lean until the gasoline and oil have been agitated; by then, damage would have occurred and the engine would have to run on an excessively rich mixture.

The correct fuel mixture ratio is 16:1, or 1/2 pint oil per gallon of gasoline. To mix the fuel properly, put approximately one-half of the desired amount of regular grade gasoline in a separate, clean container. Add the correct amount of oil, and AGITATE THIS PARTIAL MIXTURE VIGOROUSLY. Add the balance of gasoline, and AGAIN AGITATE MIXTURE THOROUGHLY. Pour the mixed fuel into the fuel tank, using a clean funnel equipped with a fine strainer.

Example: For four (4) gallons of mixture:

Pour two (2) gallons of gasoline into container,
Add one (1) quart oil (1/16th of 4 gallons), MIX THOROUGHLY,
Add remaining two (2) gallons of gasoline.

NOTE: Thorough agitation is required to completely mix or blend the fuel; the oil adheres to the bottom and sidewalls of the container unless agitated. Simply pouring the gasoline in onto the oil CANNOT accomplish thorough mixing.

CHASSIS LUBRICATION

Ski columns	Annually	Texaco ALL-TEMP or equivalent (Part No. 112451)
Ski linkage	After 25 hrs	SAE 10 oil
Drive chain	Periodically	Check for proper position of tube, and oil flow
Primary sheave	Every 15-20 hrs	Texaco ALL-TEMP Lubricant (Part No. 112451)
Track	Periodically	Check for cuts and bruises; coat damaged areas with rubber adhesive

STORAGE

PREPARATION FOR STORAGE

Be sure primer gets rust preventative into it and is completely purged.

a. Wash machine. Be certain to hose out undercarriage. Clean seating with automotive foam type upholstery cleaner.

b. Treat engine with OMC Accessories Engine Cleaner.

c. Inject OMC Rust Preventative into engine. Be sure that rust preventative gets into primer, and that all fuel is purged from carburetor.

d. Block both ends of unit off ground to take weight off track and skis.

e. Loosen track tension (see Section 9).

f. Drain fuel tank (see Section 5).

g. Rub bottoms of skis and other unprotected surfaces with cloth saturated in OMC Rust Preventative.

h. Provide for proper battery maintenance, as described in Section 6.

REMOVAL FROM STORAGE

a. Fill tank with fresh fuel mixture. Install battery.

b. Tune-up engine (see Section 4).

c. Lubricate all points, as described under "Lubrication."

d. Adjust track for proper tension, and check track alignment (see Section 9).

e. Align skis (see Section 9).

f. Check brake and throttle control adjustments.

g. Tighten all screws and nuts.

h. Test vehicle, checking particularly the following items:

1. Function of neutral shift
2. Function of brake
3. Engine performance

SECTION 11
SPECIFICATIONS

TABLE OF CONTENTS

SPECIFICATIONS

Length . . . . . 107 inches
Width . . . . . 32 inches
Height . . . . . 40-1/4 inches overall
33-1/4 inches less windshield
Engine . . . . . OMC 2-cycle twin-opposed cylinder
Rating . . . . . 14 hp maximum 4500 rpm
Speed . . . . . 30 mph plus
Starter . . . . . Model 1560 Manual rewind
Model 2060 Manual rewind
Model 2065 Electric and manual rewind
Clutch . . . . . Centrifugal, neutral lock-out
Transmission . . . . . Variable-speed, V-belt and chain
Ratio . . . . . Variable, 3:1 to 1:1
Exhaust system . . . . . Engine muffler for quiet operation
Brake . . . . . Disc type, hand operated
Throttle . . . . . Hand operated
Track . . . . . Flexible track, fully adjustable
Width: Model 1560 15.5 inches
Model 2060 20.5 inches
Model 2065 20.5 inches
Skis . . . . . Formed steel, with shock-absorbing leaf springs and replaceable wear runners
Seating . . . Two adults: vinyl coated twill cover, molded urethane foam cushion
Shroud . . . . . Molded fiberglass
Lighting . . . . . Headlight (with high and low beam) and taillight
Fuel tank . . . . . Capacity 4.5 Imperial gallons
5.4 U.S. gallons
Lubrication . . . . . 16:1 gas-oil ratio, SAE 30W oil, automatic chain oiler
Breaker point gap . . . . . .020 inch
Spark plug . . . . . Champion J8J or equivalent
Spark plug gap . . . . . .028 inch
Carburetor
Float level setting . . . . . 11/64 ± 1/32
High speed . . . . . 1-1/8 to 1-1/4 turns
Low speed . . . . . 1 to 1-1/4 turns
Ignition
Spark plug . . . . . Champion J8J or equivalent
Spark plug gap . . . . . .028 inch
Spark plug torque . . . . . 20 foot-pounds
Breaker point gap . . . . . .020 - .022 inch
Condenser capacity . . . . . .18 - .22 mfd
Magneto drive coil resistance . . . . . .8 ohm
Ignition coil primary resistance . . . . . 1.5 ohm - 1966
Ignition coil secondary resistance . . . . . 10,000 ohms - 1966
1965 - Part No. 580602 Coil Assembly (double end)
Primary resistance . . . . . .8 ohm
Secondary resistance . . . . . 15000 - 17000 ohms
Engine
Bore and stroke . . . . . 2-1/2 x 2-1/4 inches
Piston displacement . . . . . 22 cubic inches
Ring diameter . . . . . 2-1/2 inches
Ring thickness . . . . . 1/16 inch
Clearances
Piston - wrist pin . . . . . Press fit
Piston ring gap . . . . . .010 to .013 inch
Piston ring - ring groove . . . . . .001 to .002 inch
Cylinder - piston . . . . . .009 to .012 inch - top of skirt to minimum bore. Cylinder bore is "barreled" over the exhaust port.
Torque Chart
Flywheel nut . . . . . 40-45 Ft. Lbs.
Connecting rod screws . . . . . 29-31 Ft. Lbs.
Cylinder head nuts . . . . . 8-10 Ft. Lbs.
Crankcase screws . . . . . 5-7 Ft. Lbs.--60-80 In. Lbs.
Spark plugs . . . . . 20-20-1/2 Ft. Lbs.

Standard Hardware Unless Otherwise Specified

SCREW SIZE	TORQUE	
	FT. LBS.	INCH LBS.
#10	2-3	25-35
1/4	5-7	60-80
5/16	10-12	120-140
3/8	18-20	220-240

OUTBOARD MARINE CORPORATION OF CANADA LTD.
PETERBOROUGH, CANADA

KEN COOK INTERNATIONA