TRAIL-TWISTER (340/440) PARTS MANUAL

MERCURY MARINE

A BRUNSWICK COMPANY

JUNE 1975

SERIAL NUMBERS:

Chassis (340)	4345825 and up
Chassis (440)	4347125 and up
Engine (340) - Kohler	501001 and up
Engine (440) - Kohler	501001 and up

INDEX:

	Page
Carburetor Assembly, Complete (340 T/T and 440 T/T)	10
Chaincase, Sprockets and Brake	15
Chassis Assembly	14
Cowls and Windshield	11
Crankcase, Crankshaft and Piston Assembly	6
Cylinder Assembly and Engine Shroud	3
Dashboard, Wiring Harness and Seat Cushion	26
Drive Sheave and Driven Sheave Assembly	27
Fan Housing and Recoil Starter	2
Fuel System and Carburetor Air Intake	7
Handlebar and Steering Linkage	22
High Altitude Parts	27
Ignition Coil, Trigger and Flywheel Assembly(STYLE "A" AND STYLE "B")	29 & 30
Muffler and Engine Mounting Plate	31
Slide Suspension Frame (front)	18
Slide Suspension (rear) and Bogie Wheel Kit	19
Steering Spindle and Ski Assembly	23

"TYPICAL VIEWS ARE SHOWN" AR = As Required

NOTE: All Part Numbers preceded by a dot (•) are new and listed for the first time.

ACCESSORIES

Carburetor Kit, High Altitude - 340 T/T	D-1393-6150A1
Clutch Kit, High Altitude - 340 T/T	D-74124A1
Sprocket, High Altitude (14T) - 340 T/T	D-64684
Chain, High Altitude (76 P.L.) - 340 T/T	D-69514
Carburetor Kit, High Altitude - 440 T/T	D-1393-5874A2
Clutch Kit, High Altitude - 440 T/T	D-71716A1
Sprocket, High Altitude (15T) - 440 T/T	D-63318A1
Chain, High Altitude (76 P.L.) - 440 T/T	D-69514
Decal Set	C-37-73740A76
Trail-Twister Parts Manual	C-90-74107
Carbide Insert Wear Skegs	D-71334
Merc Stud Kit	D-68441
Merc Stud Kit, carbide	D-71926
Merc Stud Kit, scat	D-71925
Spanner Wrench	C-91-67929
Fuel Gauge and Cap - 340 T/T	D-36-74030
Speedometer Assembly - 340 T/T	D-79-71186A1
Tachometer Assembly - 340 T/T	D-79-71185A1

MERCURY MARINE

DIVISION OF BRUNSWICK CORPORATION

FOND DU LAC, WISCONSIN 54935

PRINTED IN U.S.A. REVISED NOVEMBER 1975

USE ONLY GENUINE

MERCAP

REPLACEMENT PARTS

AND

QUICKSILVER

ACCESSORIES

FAN HOUSING AND RECOIL STARTER

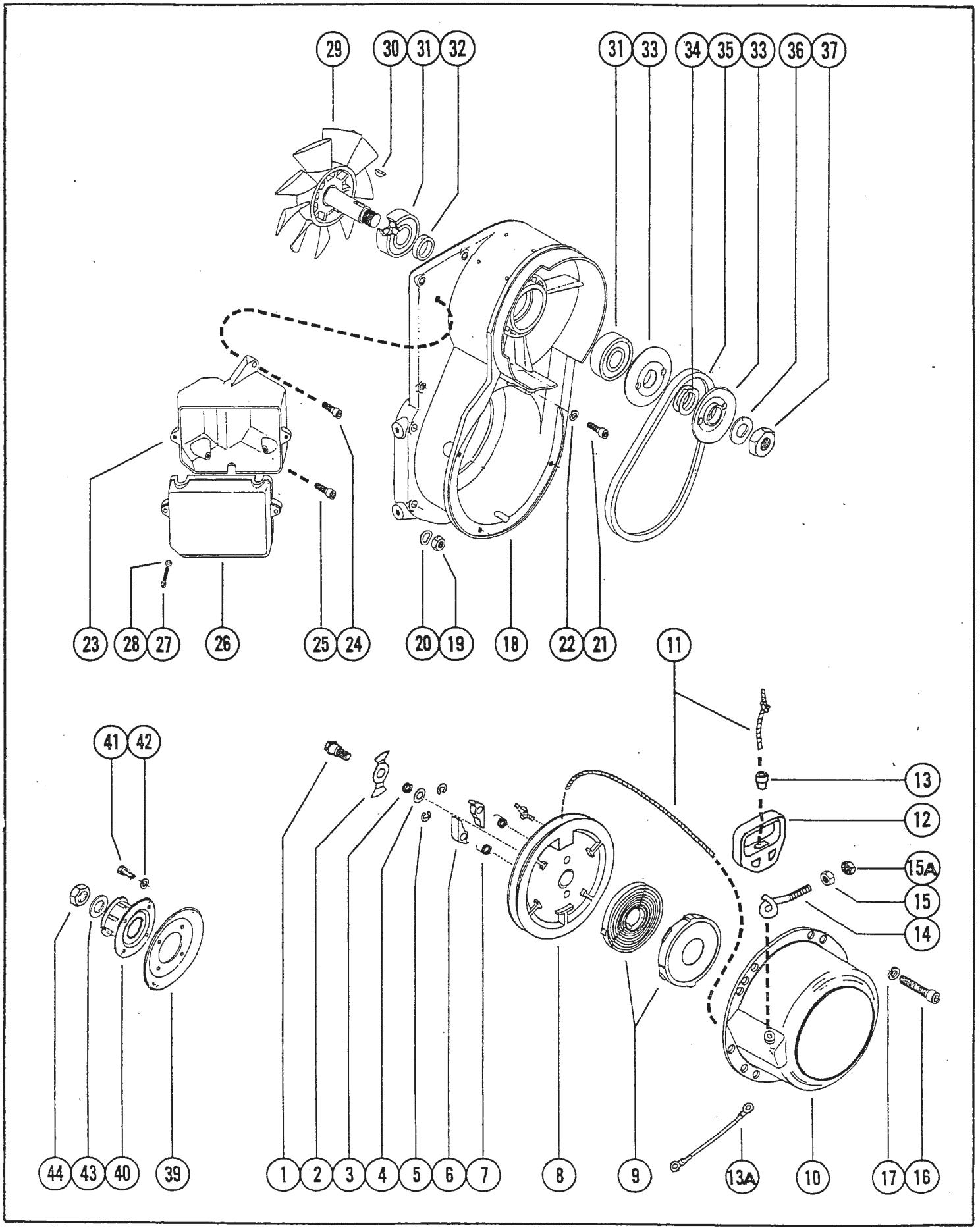

FAN HOUSING AND RECOIL STARTER

PART NO.	REF. NO.	DESCRIPTION	QUAN.
D-50-69983	-	Retractable Starter Assembly	1
C-10-67191	1	Screw, starter components to starter housing	1
D-67192	2	Cam, starter pawl	1
C-24-67193	3	Spring, brake - starter pawl	1
C-12-67194	4	Washer, brake spring	1
C-53-67195	5	Snap Ring, starter pawl retaining	2
D-67196	6	Pawl, starter	2
C-24-67197	7	Spring, starter pawl	2
D-67198	8	Pulley Assembly, starter	1
C-24-67199	9	Spring, return - starter rewind pulley	1
D-67770	10	Housing, starter rewind	1
C-50-28985A1	11	Starter Rope	1
D-62631A1	12	Handle Assembly, starter rope	1
D-62632	13	Snubber, starter rope to handle	1
C-84-63415A2	13A	Ground Strap	1
D-68196	14	Guide, starter rope	1
C-11-24883	15	Nut, starter rope guide attaching	1
C-11-23161	15A	Nut, starter rope guide attaching	1
C-10-67181	16	Screw, starter housing to bell housing	4
C-12-67187	17	Lockwasher, starter housing to bell housing screw	4
D-71198	18	Housing, fan	1
C-11-67144	19	Nut, fan housing attaching	5
C-13-67145	20	Washer, wave - fan housing attaching screw	5
C-10-67181	21	Screw, fan housing attaching	4
C-12-67187	22	Washer, wave - fan housing screw	4
D-71208	23	Housing, coil	1
C-10-71195	24	Screw, coil housing to fan housing	5
C-10-71209	25	Screw, coil housing to fan housing	1
D-71210	26	Cover, coil box	1
C-10-71211	27	Screw, coil cover to coil housing	2
C-12-71212	28	Washer, coil cover attaching screw	2
D-71199	29	Fan, cooling	1
C-28-67174	30	Key, cooling fan shaft	1
D-30-71200	31	Ball Bearing, fan shaft	2
D-23-71201	32	Spacer, fan shaft bearing	1
D-71202	33	Pulley, fan drive	2
C-15-71203	34	Shim, fan pulley	AR
D-57-71206	35	Belt, fan drive	1
C-13-71205	36	Lockwasher, fan shaft nut	1
C-11-71204	37	Nut, fan shaft	1
D-67179	39	Sheave, starter	2
D-67180	40	Starter Cup	1
C-10-67181	41	Screw, starter cup sheave and hub to flywheel	4
C-12-67187	42	Washer, starter cup screw	4
C-12-67177	43	Washer, flywheel to crankshaft	1
C-11-67178	44	Nut, flywheel to crankshaft	1

CYLINDER ASSEMBLY AND ENGINE SHROUD

PART NO.	REF. NO.	DESCRIPTION	QUAN.
D-71767	1	Adaptor	1
C-13-26993	2	Lockwasher, adaptor to cylinder nut	4
C-11-67144	3	Nut, adaptor to cylinder	4
C-27-71768	4	Gasket, adaptor to cylinder	2
C-16-67162	5	Stud, carburetor mounting	4
C-13-67145	6	Washer, wave - mounting stud	4
C-11-67144	7	Nut, mounting stud	4
D-71766	8	Plate, intake enclosure	1
D-860-6153	9	Cylinder, piston - 340 T/T	2
●D-860-6087	9	Cylinder, piston - 440 T/T	2
C-16-69995	10	Stud, cylinder - intake	4
D-71261	11	Nipple, exhaust	2
D-27-69985	12	Gasket, cylinder base	2
C-16-69994	13	Stud, cylinder to cylinder head	10
●C-27-74113	14	Gasket, cylinder head to cylinder (340 T/T)	2
●D-861-6156	15	Cylinder Head (340 T/T)	2
D-27-69984	14	Gasket, cylinder head to cylinder (440 T/T)	2
D-861-5715	15	Cylinder Head (440 T/T)	2
C-12-67169	16	Washer, cylinder head mounting screw	10
C-13-26993	17	Lockwasher, cylinder head mounting screw	8
C-11-67144	18	Nut, cylinder head mounting screw	8
C-11-69989	19	Nut, cylinder head and air shroud attaching	2
D-33-73271	20	Spark Plug	2
D-71283	21	Protector, spark plug	2
D-69999	22	Air Shroud, exhaust side	1
C-10-71196	23	Screw, air shroud attaching	2
C-13-67145	24	Washer, wave - air shroud screw	2
D-69998	25	Air Shroud, intake side	1
C-10-71195	26	Screw, shroud attaching	5
C-12-67187	27	Washer, wave - shroud attaching screw	5

CYLINDER ASSEMBLY AND ENGINE SHROUD

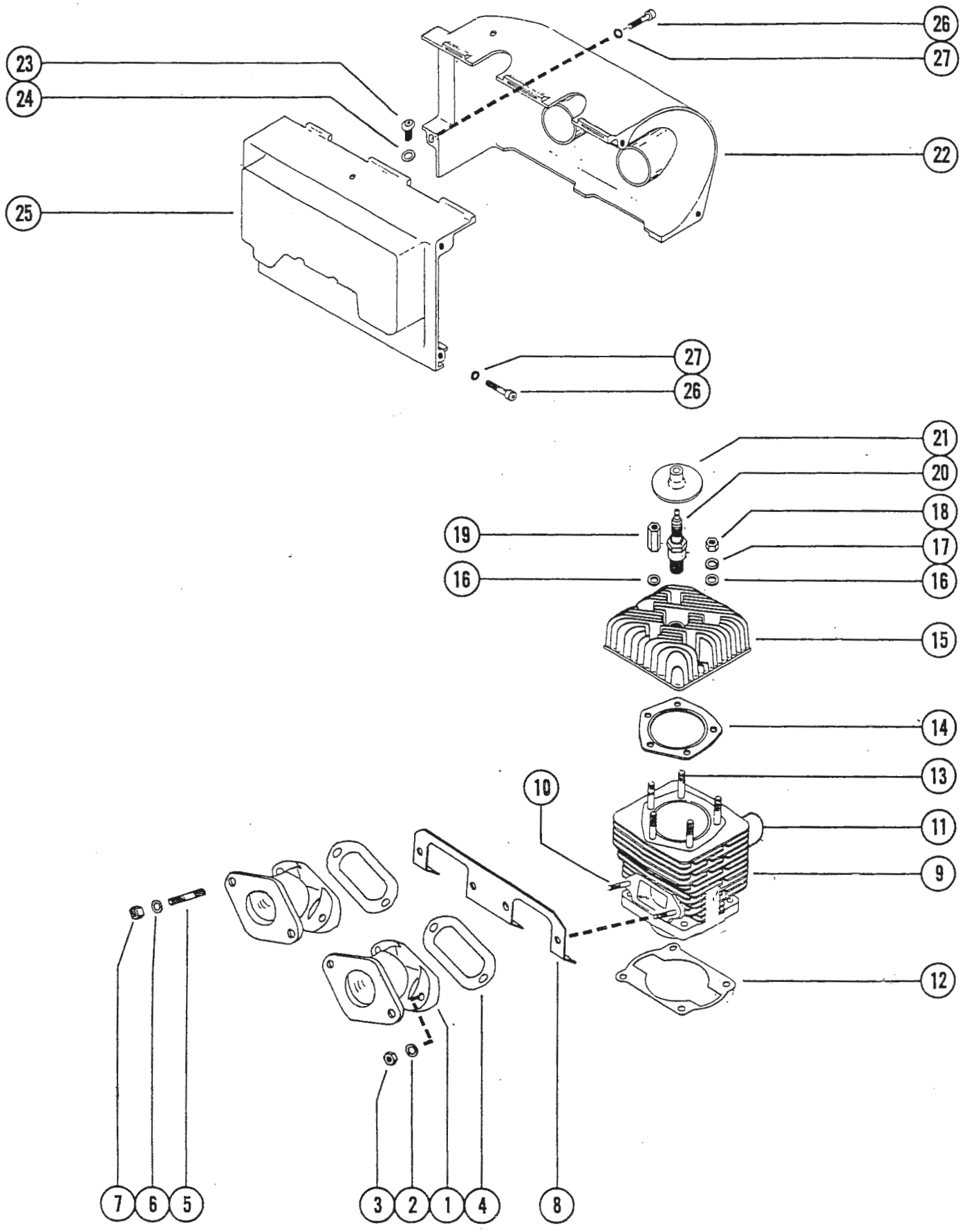

CRANKCASE, CRANKSHAFT AND PISTON ASSEMBLY

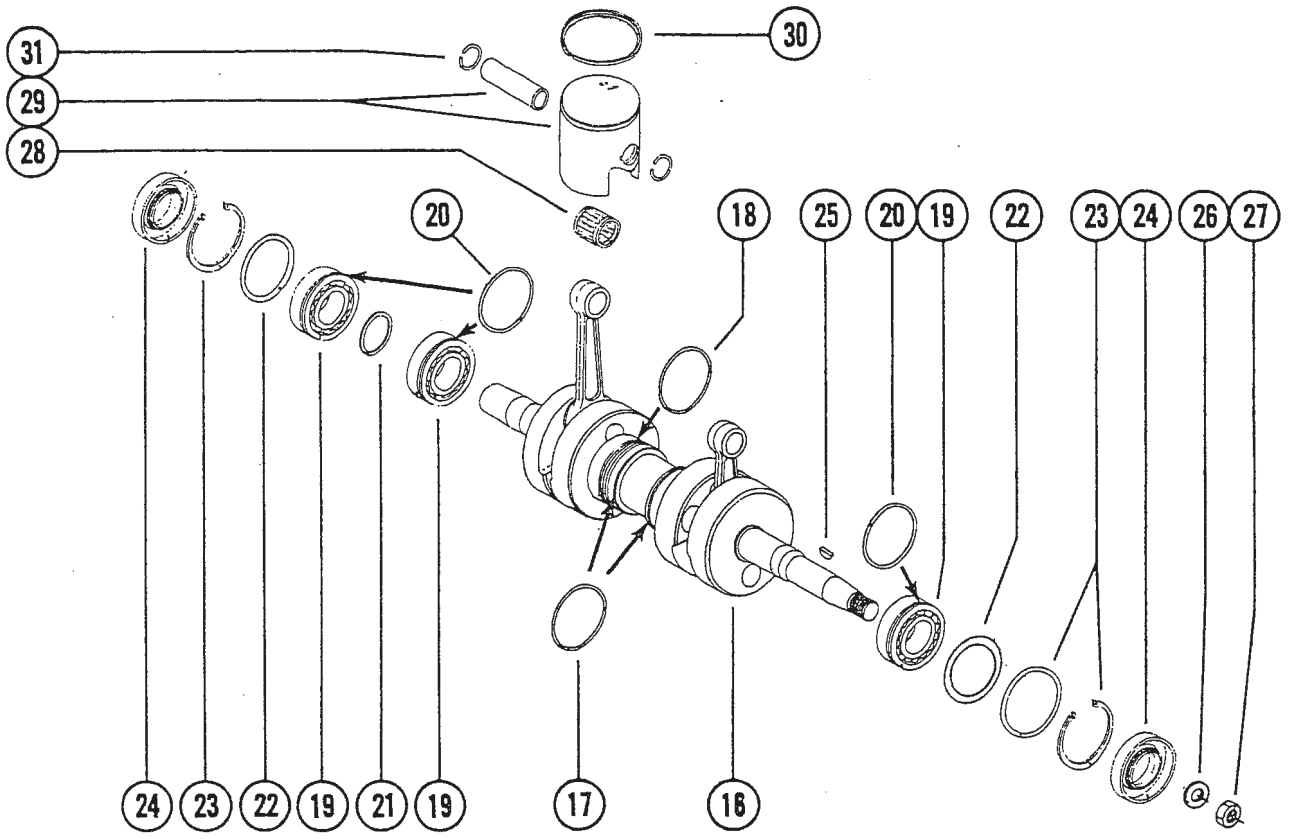

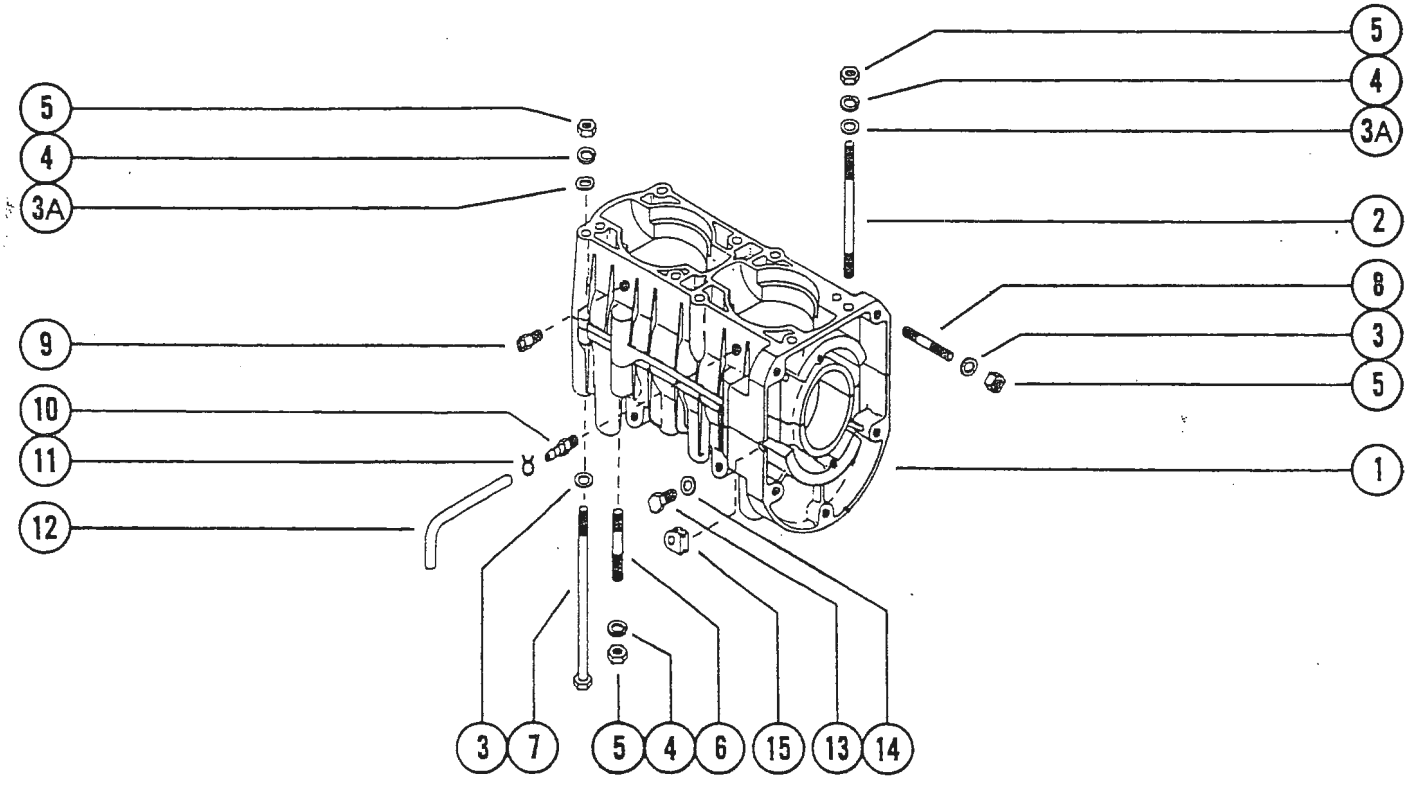

CRANKCASE, CRANKSHAFT AND PISTON ASSEMBLY

PART NO.	REF. NO.	DESCRIPTION	QUAN.
D-958-5714	1	Crankcase Assembly	1
C-16-69986	2	Stud, cylinder to crankcase	3
C-13-67145	3	Washer, wave - crankcase screw	5
C-12-71222	3A	Washer, mounting studs	13
C-13-26993	4	Lockwasher, crankcase screw	26
C-11-67144	5	Nut, cylinder to crankcase screw	35
C-16-67161	6	Stud, crankcase attaching	6
C-10-69987	7	Screw, cylinder to crankcase	5
C-16-69978	8	Stud, crankcase to vent housing	5
C-19-67853	9	Plug, crankcase	1
C-22-67148	10	Connector, pulse tube	1
C-54-68424	11	Clamp, pulse tube	2
C-32-70432	12	Tube, pulse	1
C-10-67146	13	Screw, plug - crankcase drain	2
C-12-67147	14	Washer, crankcase drain screw	2
C-25-67176	15	Grommet, crankcase	2
D-457-5716	16	Crankshaft Assembly (including connecting rods)	1
C-25-67151	17	"O" Ring, crankshaft bearings	2
C-25-67152	18	"O" Rings, distance ring	1
C-30-67153	19	Ball Bearing, crankshaft	3
C-25-67151	20	"O" Ring, crankshaft end bearings	5
C-12-67155	21	Washer, ball bearing	1
C-15-67156	22	Shim, ball bearing	AR
C-53-67158	23	"E" Ring, crankshaft end bearing	2
D-26-67159	24	Oil Seal, crankshaft	2
C-28-67174	25	Key, crankshaft - flywheel locating	1
C-12-67177	26	Washer, crankshaft flywheel nut	1
C-11-67178	27	Nut, crankshaft flywheel attaching	1
D-31-67160	28	Roller Bearing, piston pin	2
●D-757-6154	29	Piston Assembly	2
●D-39-74111A1	30	Piston Ring Assembly — 340 T/T	2
D-40-67773	31	Ring, retaining - piston pin	4
D-757-6084	29	Piston Assembly	2
D-39-73032A1	30	Piston Ring Assembly — 440 T/T	2
D-40-67773	31	Ring, retaining - piston pin	4

NOTE: For replacement of Engine Assembly Complete, order part number ●D-73170A2 - 340 T/T; ●D-72998A2 - 440 T/T

FUEL SYSTEM AND CARBURETOR AIR INTAKE

PART NO.	REF. NO.	DESCRIPTION	QUAN.
D-1246-5417	1	Fuel Tank	1
D-36-68244	2	Cap, fuel tank - 340 T/T	1
D-36-74030	2	Cap and Gauge, fuel tank (not shown) - 440 T/T	1
D-27-75231	2A	Gasket, fuel cap	1
D-67974	3	Mount, fuel tank	1
C-17-63410	4	Rivet, fuel tank mount to chassis	2
C-12-21273	5	Washer, fuel tank mount to chassis rivet	2
D-72995	6	Pad, fuel tank mounting (cut to correct length)	3
D-67942	7	Fuel Pick-Up, fuel tank	1
C-22-67943	8	Fitting, fuel shut off	1
C-32-68412-1	9	Hose, fuel pick-up to fuel shut off valve (16")	1
C-32-68412-1	10	Hose, fuel tank to fuel pump (15 3/4")	1
D-71839	11	Fuel Pump	1
C-10-21937	12	Screw, fuel pump attaching (2")	2
C-23-72991	13	Spacer, fuel pump attaching screw	2
C-12-34917	13A	Washer, fuel pump attaching screw	2
C-11-20361	13B	Nut, fuel pump attaching screw	2
C-32-68412-1	14	Hose, fuel pump to carburetor (15 3/4")	2
D-1380-5957	15	Carburetor Assembly - 340 T/T } see Page 10 for breakdown	2
D-1373-6057	15	Carburetor Assembly - 440 T/T } see Page 10 for breakdown	2
D-73017	16	Adaptor, carburetor to cylinder block - 340 T/T	2
D-67539	16	Adaptor, carburetor to cylinder block - 440 T/T	2
D-73964	17	Air Intake, carburetor - 340 T/T	1
D-72904	17	Air Intake, carburetor - 440 T/T	1
C-10-54744	18	Screw, air intake to carburetor silencer (3/4")	2
C-18-34212	18A	Pin, cotter - air intake to inlet silencer	1
C-54-37759A1	19	Clamp, carburetor to air intake	2
D-72977	20	Inlet Silencer, air intake	1
D-73965	21	Inlet Silencer, fan	1
D-72113	22	Choke Cable	1
D-72587	23	Bezel, choke cable	1
D-72588	24	Lever, choke control	1
C-17-72589	25	Pin, lever attaching	1
C-54-72826	26	Clamp, fuel hose attaching	4
C-54-72838	27	Clamp, fuel hose attaching to carburetor	2

FUEL SYSTEM AND CARBURETOR AIR INTAKE

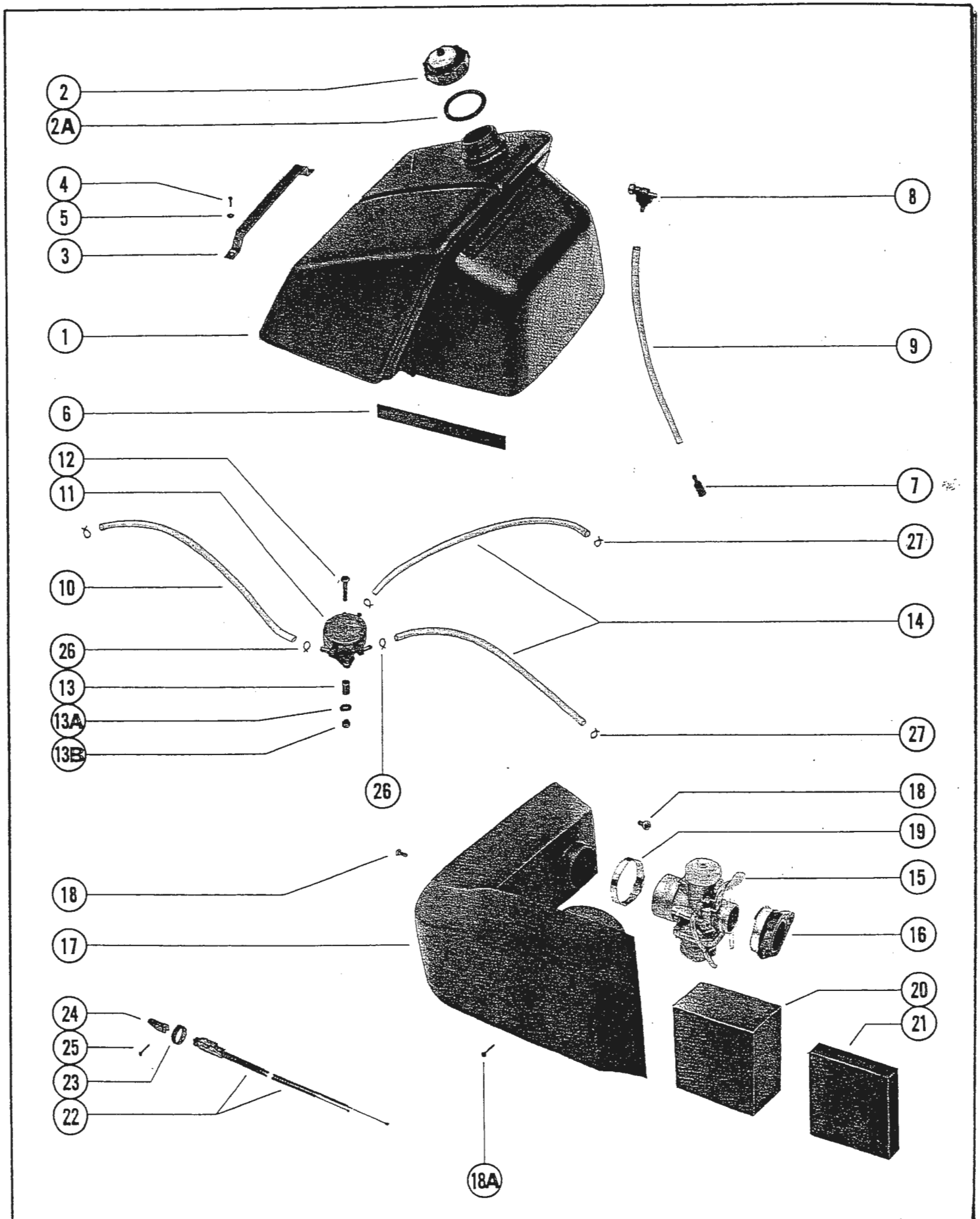

CARBURETOR ASSEMBLY

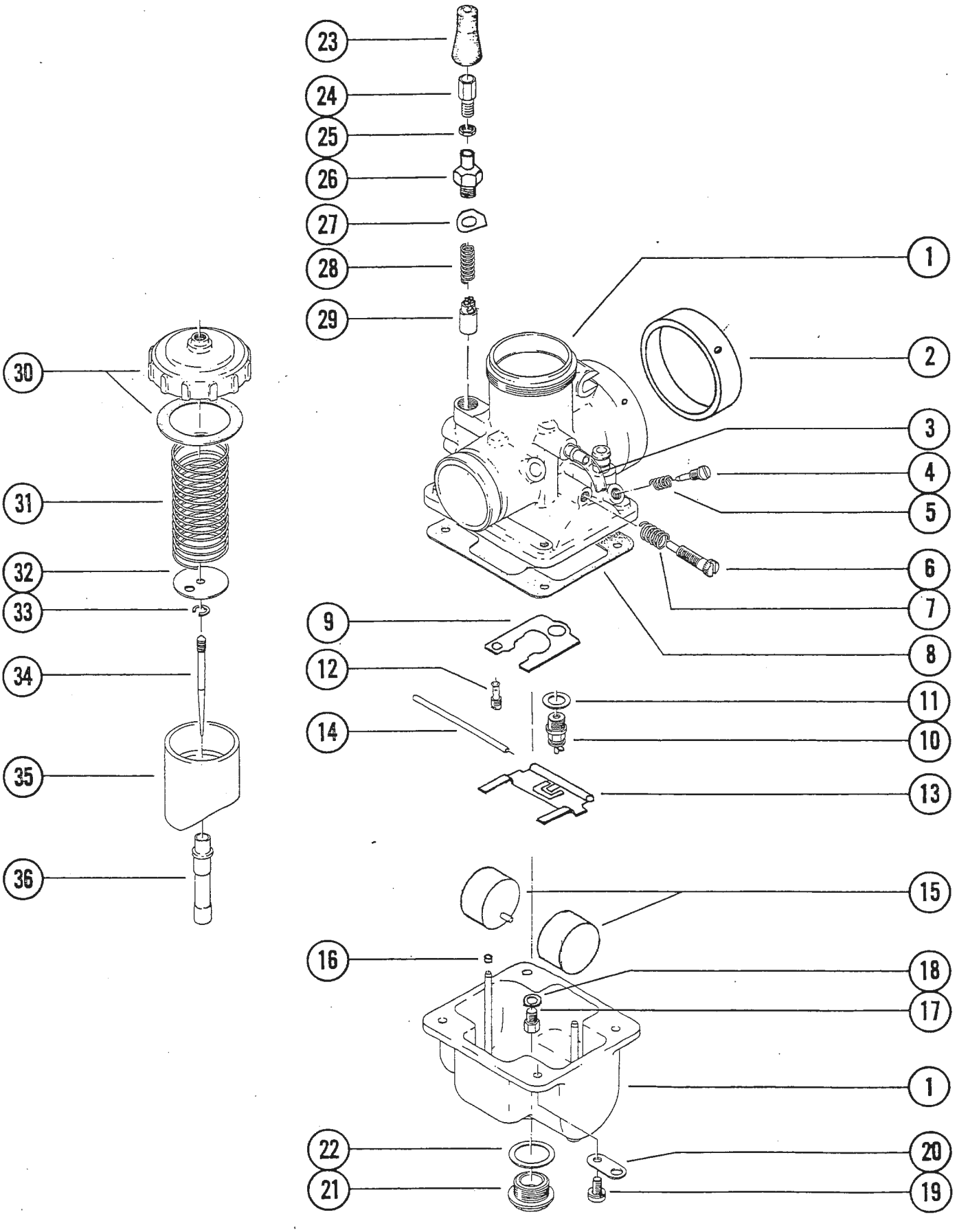

CARBURETOR ASSEMBLY

PART NO.	REF. NO.	DESCRIPTION	340 T/T	440 T/T
D-1380-5957	1	Carburetor Assembly, Complete - 340 T/T	2	-
D-1373-6057	1	Carburetor Assembly, Complete - 440 T/T	-	2
D-1393-5858	2	Ring, air funnel	-	2
D-1393-5851	3	Hose, float chamber balance	4	4
D-1393-5487	4	Screw, idle mixture	2	2
D-1393-5486	5	Spring, idle mixture screw	2	-
D-1393-6158	5	Spring, idle mixture screw	-	2
D-1393-6168	6	Screw, idle speed	2	-
D-1393-5501	6	Screw, idle speed	-	2
D-1393-5502	7	Spring, idle speed screw	2	2
D-1393-6163	8	Gasket, float chamber	2	-
D-1393-5849	8	Gasket, float chamber	-	2
D-1393-6170	9	Plate, fuel stabalizer	2	-
D-1393-5857	9	Plate, fuel stabalizer	-	2
D-1393-5474	10	Inlet Needle and Seat	2	2
D-1393-5476	11	Gasket, inlet needle and seat	4	4
D-1393-5874	12	Idle Discharge Jet (No. 30)	2	-
D-1393-5471	12	Idle Discharge Jet (No. 35)	-	2
D-1393-6171	13	Arm, float	2	-
D-1393-5473	13	Arm, float	-	2
D-1393-5850	14	Pin, float arm	2	2
D-1393-6167	15	Float	4	-
D-1393-5491	15	Float	-	4
D-1393-5498	16	Cap, float retaining	-	4
D-1393-6147	17	Main Jet (200) - standard	2	-
D-1393-5506	17	Main Jet (270) - standard	-	2
D-1393-5493	18	Washer, main fuel jet	2	2
D-1393-5852	19	Screw, float chamber	8	8
D-1393-5478	20	Plate, hose retaining	4	4
D-1393-6165	21	Plug, fuel drain	2	-
D-1393-5856	21	Plug, fuel drain	-	2
D-1393-5495	22	Gasket, fuel drain plug	2	2
D-1393-6161	23	Cap, starter plunger cover	2	2
D-1393-6162	24	Adjuster, throttle cable	2	2
D-1393-5482	25	Nut, lock - throttle cable adjuster	2	2
D-1393-5877	26	Retainer, starter plunger shaft	2	2
D-1393-6159	27	Washer, starter plunger retainer	2	-
D-1393-5876	27	Washer, starter plunger retainer	-	2
D-1393-6160	28	Spring, starter plunger shaft	2	2
D-1393-5879	29	Plunger Shaft, starter	2	2
D-1393-6164	30	Cover Assembly, throttle body	2	-
D-1393-5853	30	Cover Assembly, throttle body	-	2
D-1393-5485	31	Spring, throttle valve	2	2
D-1393-6166	32	Plate, throttle cable	2	-
D-1393-5497	32	Plate, throttle cable	-	2
D-1393-5496	33	Ring, retaining	2	2
D-1393-6175	34	Jet Needle	2	-
D-1393-5492	34	Jet Needle	-	2
D-1393-6169	35	Throttle Valve - standard	2	-
D-1393-5854	35	Throttle Valve - standard	-	2
D-1393-6174	36	Needle Jet Tube	2	-
D-1393-5472	36	Needle Jet Tube	-	2

HIGH ALTITUDE PARTS
SEE PAGE 27

COWLS AND WINDSHIELD

PART NO.	REF. NO.	DESCRIPTION	QUAN.
D-73617	1	Cowl, lower	1
D-70895	2	Bracket, support - lower cowl	4
D-63416-1	3	Reflector, amber - lower cowl	2
C-17-65346	4	Rivet, amber reflector to lower cowl	4
C-12-21273	5	Washer, amber reflector to lower cowl inlet	4
C-17-68230	6	Rivet, bottom cowl to chassis	50
D-74514	7	Shield, lower cowl	1
C-11-53300	8	Nut, lower cowl shield attaching	1
C-12-20722	9	Washer, lower cowl shield attaching	1
C-11-53916	10	Nut, wing - lower cowl shield attaching	1
D-74675	11	Bumper, bottom cowl - right side	1
D-74260	12	Bumper, bottom cowl - left side	1
C-11-20890	13	Nut, bumper attaching	8
C-13-21272	14	Lockwasher, bumper attaching	8
D-70898	15	Bracket, bumper attaching	1
C-11-20190	16	Nut, bumper bracket attaching	4
C-12-21273	17	Washer, bumper bracket attaching	2
D-74034A2	18	Cowl Assembly, top (Without Decals)	1
D-71884	19	Hinge, top cowl	1
C-11-20190	20	Nut, hinge to top cowl	4
C-12-21273	21	Washer, hinge to top cowl	4
D-61364	22	Retainer, cowl latch	2
C-17-53567	23	Rivet, retainer to top cowl	8
C-12-21273	24	Washer, retainer to top cowl rivet	8
D-68371A1	25	Insulation Assembly, sound - top cowl	1
D-72009	26	Lanyard, top cowl stop	1
C-24-72109	27	Spring, lanyard	1
C-26551	28	Bracket, lanyard spring	1
D-74008	29	Trim, air inlet - top cowl	1
C-17-71954	30	Rivet, top cowl trim attaching - bottom and sides	5
C-17-71954	30	Rivet, top cowl trim attaching - top	2
C-12-21273	31	Washer, top cowl trim rivets	2
D-68413-6	32	Moulding, air outlet - top cowl - upper	2
D-68413-6	32	Moulding, air outlet - top cowl - right side	1
D-68413-6	32	Moulding, air outlet - top cowl - left side	1
D-68413-6	32	Moulding, rear trim - top cowl	1
D-67788	33	Rim, mounting - headlight	1
C-10-67789	34	Screw, headlight adjusting	4
C-24-67791	35	Spring, headlight adjusting screw	4
D-88-67793	36	Sealed Beam, headlight	1
D-67792	37	Cover, sealed beam headlight	1
D-67794	38	Retainer, sealed beam cover - headlight	2
D-67947	39	Windshield, top cowl	1
D-62540	40	Moulding, trim - windshield	1
D-68242	41	Trim, windshield retainer	1
C-10-65386	42	Screw, windshield to top cowl (1")	9
C-12-22937	43	Washer, windshield to top cowl screw	9
C-11-46887	44	Nut, windshield to top cowl screw	9

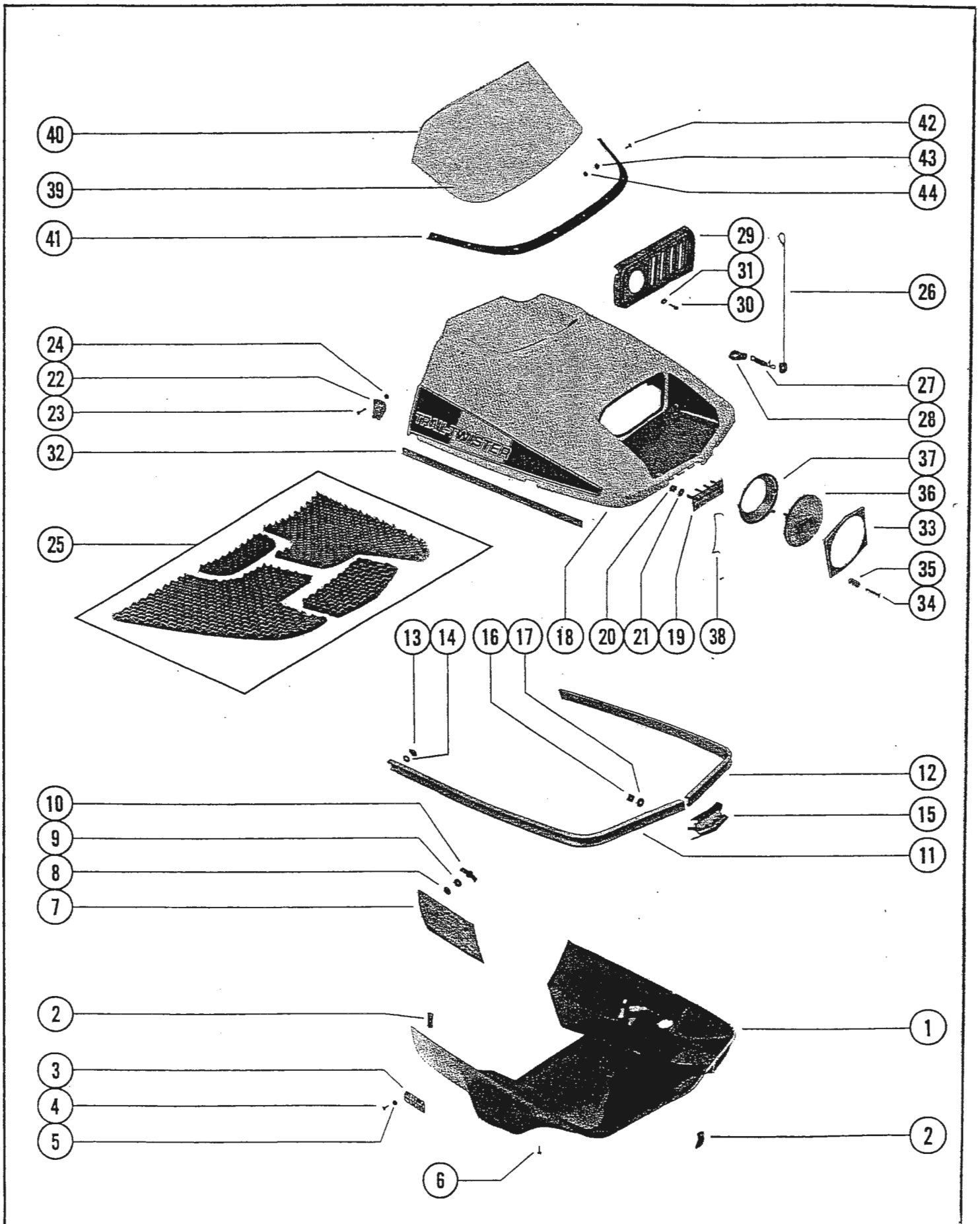
40
39
41
42
43
44
29
31
30
26
24
22
23
32
27
28
37
36
33
35
34
25
13
14
16
17
18
20
21
19
38
12
15
11
10
9
8
7
2
3
4
5
6
1
2

CHASSIS ASSEMBLY

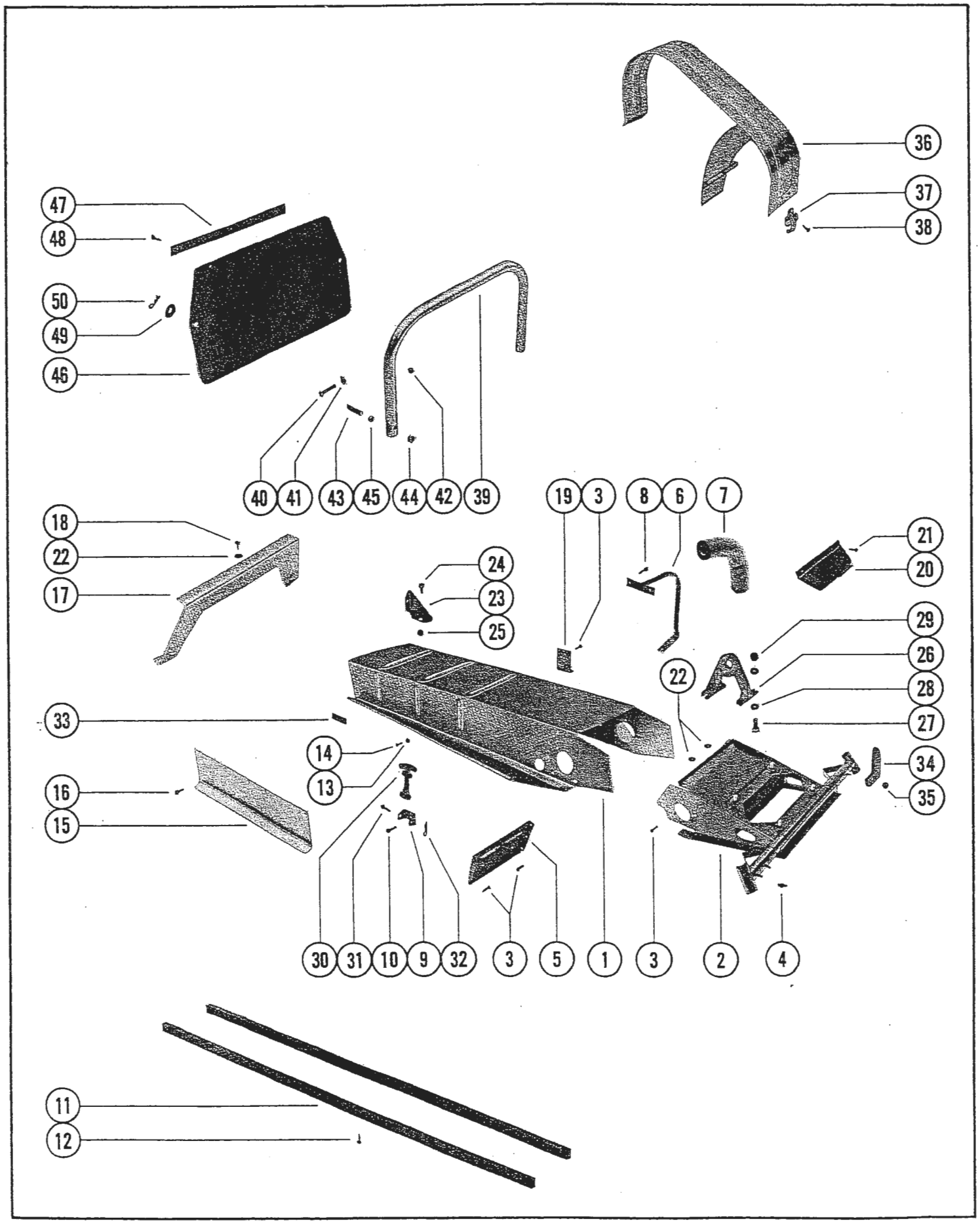

CHASSIS ASSEMBLY

PART NO.	REF. NO.	DESCRIPTION	QUAN.
•D-74001A3	1	Chassis Assembly	1
D-70972	2	Crossmember Assembly, chassis	1
C-17-68245	3	Rivet, crossmember and foot pads to chassis	36
C-22-49099	4	Fitting, grease - crossmember	2
•D-74322	5	Foot Rest, right side	1
•D-74323	5	Foot Rest, left side	1
D-67556	6	Stirrup, chassis	2
D-67561	7	Pad, chassis stirrup	2
C-17-68825	8	Rivet, stirrup to chassis	8
D-67936	9	Bracket, top cowl latch	2
C-17-68825	10	Rivet, top cowl latch to chassis	2
D-70727	11	Wear Strip, chassis - track	2
C-17-71790	12	Rivet, wear strip to chassis	16
D-67634	13	Fastener, seat cushion	22
C-17-58988	14	Rivet, seat cushion fastener to chassis	22
D-70728	15	Wear Plate, chassis	2
C-17-68245	16	Rivet, wear plate to chassis	14
D-67542	17	Bulkhead, chassis - rear	1
C-17-68825	18	Rivet, bulkhead to chassis	6
•D-73955	19	Mount, front control arm to chassis	2
•D-74259	20	Guard, clutch	1
C-17-71954	21	Rivet, clutch guard attaching	2
C-12-21273	22	Washer, front crossmember and rear bulkhead	3
D-67592	23	Bracket, tail light mounting	2
C-10-69022	24	Screw, tail light mounting bracket to chassis (1/2")	2
C-11-20190	25	Nut, tail light mounting bracket screw	4
•D-72960	26	Pillow Block, crossmember	1
C-10-55253	27	Screw, pillow block to chassis (T)	4
C-12-20553	28	Washer, pillow block mounting screw	4
C-11-20509	29	Nut, pillow block mounting screw	4
D-58707	30	Latch, chassis bracket to top cowl bracket	2
C-17-58712	31	Pin, clevis - cowl latch to bracket	2
C-18-58713	32	Hairpin, cowl latch clevis pin	2
D-63416-2	33	Reflector, red	2
D-71650	34	Bracket, bottom cowl and bumper reinforcing - left side	1
D-71651	34	Bracket, bottom cowl and bumper reinforcing - right side	1
C-11-35814	35	Nut, reinforcing bracket to front crossmember stud	4
•D-72993A1	36	Guard Assembly, sheave	1
C-54-71555	37	Clamp, sheave guard	1
C-17-68245	38	Rivet, hinge to sheave guard	8
D-67605	39	Handgrip, rear	1
C-10-20784	40	Screw, handgrip to chassis - upper (1 1/2")	2
C-12-67973	41	Washer, handgrip to chassis screw - upper	2
C-11-53210	42	Nut, handgrip to chassis screw - upper	2
C-10-67952	43	Screw, handgrip to chassis - lower (2 11/16")	2
C-11-24883	44	Nut, jam - handgrip to chassis screw (lower)	2
C-11-49197	45	Nut, eslok - handgrip to chassis screw	2
D-70875	46	Snow Flap	1
D-67945	47	Doubler, snow flap	1
C-17-64817	48	Rivet, doubler to snow flap	3
C-12-48241	49	Washer, snow flap to lower handgrip screw	2
C-18-58181	50	Hairpin, snow flap to lower handgrip screw	2

CHAINCASE, SPROCKETS AND BRAKE

PART NO.	REF. NO.	DESCRIPTION	QUAN.
D-72959	1	Chaincase	1
C-10-58714	2	Screw, chassis to chaincase (1 1/4")	5
C-12-20086	3	Washer, chassis to chaincase screw	5
C-11-23161	4	Nut, chassis to chaincase screw	5
C-10-67571	5	Screw, sprocket to drive shaft (1")	1
C-14-61371	6	Tab Washer, drive shaft screw	1
D-67570	7	Sprocket, drive shaft (34 teeth)	1
C-12-67569	8	Washer, wave - sprocket to chaincase	1
C-12-67636	9	Washer, sprocket to chaincase	1
C-30-67733	10	Ball Bearing, drive shaft	1
C-53-55626	11	Snap Ring, drive shaft bearing retainer	1
C-26-67924	12	Oil Seal, chaincase	1
D-67581	13	Bracket, tensioner - drive chain	1
D-67585	14	Idler Wheel, chain tensioner	1
D-67584	15	Pin, idler wheel to tension bracket	1
C-10-67937	16	Screw, tensioner adjustment (3 1/2")	1
C-11-32219	17	Nut, jam - tensioner adjustment screw	1
C-10-69094	18	Screw, chaincase cover to chaincase (1 7/8")	4
C-26-34217	19	Seal, chaincase cover screws	5
C-11-62771	20	Nut, chaincase cover to chaincase screw	4
D-67587	21	Cover, chaincase	1
D-70880	22	Seal, chaincase to chaincase cover	1
D-58404	23	Cap, chaincase cover	1
C-10-67956	24	Screw, sprocket to driven shaft (1")	1
C-13-35048	25	Lockwasher, sprocket to driven shaft screw	1
C-12-55149	26	Washer, sprocket to driven shaft screw	1
C-23-69842	26A	Spacer, sprocket	1
D-69757A17	27	Sprocket, driven shaft (17 teeth)	1
D-69757A18	27	Sprocket, driven shaft (18 teeth)	1
C-30-67735	28	Ball Bearing, driven shaft	1
C-53-23721	29	Snap Ring, bearing retainer	1
D-73996A1	30	Brake Disc, drive shaft	1
D-45-74368	31	Shaft, driven	1
C-30-67734	32	Ball Bearing, driven shaft	1
D-67768	33	Retainer, driven shaft brg.	2
C-10-62049	34	Screw, bearing retainer (1")	3
C-11-35814	35	Nut, bearing retainer screw	3
D-71483	36	Chain, drive (78 pitch length)	1
D-69514	36	Chain, drive (76 pitch length)	Opt.
D-68126	37	Brake Assembly	1
D-73706	38	Disc, brake	2
D-70784	39	Arm, brake actuating	1
D-68128	40	Bracket, brake cable mounting	1
C-10-53833	41	Screw, brake and cable mounting bracket to chaincase	1
C-11-23161	42	Nut, brake and mounting bracket screw	2
C-10-31919	43	Screw, clevis to actuating arm (3/4")	1
C-23-61329	44	Bushing, clevis to actuating arm	1
C-11-46438	45	Nut, clevis to actuating arm screw	1
D-73381	46	Spacer, brake assembly to chaincase	AR
D-57-74294	47	Belt, variable speed (drive) - Goodyear	1
D-57-74293	47	Belt, variable speed (drive) - Dayco	Opt.

OPTIONAL SPROCKETS

D-64131	Sprocket (16 Teeth)
D-63318A1	Sprocket (15 Teeth)
D-64684	Sprocket (14 Teeth)
D-68439	Sprocket (13 Teeth)
D-69757A12	Sprocket (12 Teeth)

CHAINCASE, SPROCKETS AND BRAKE

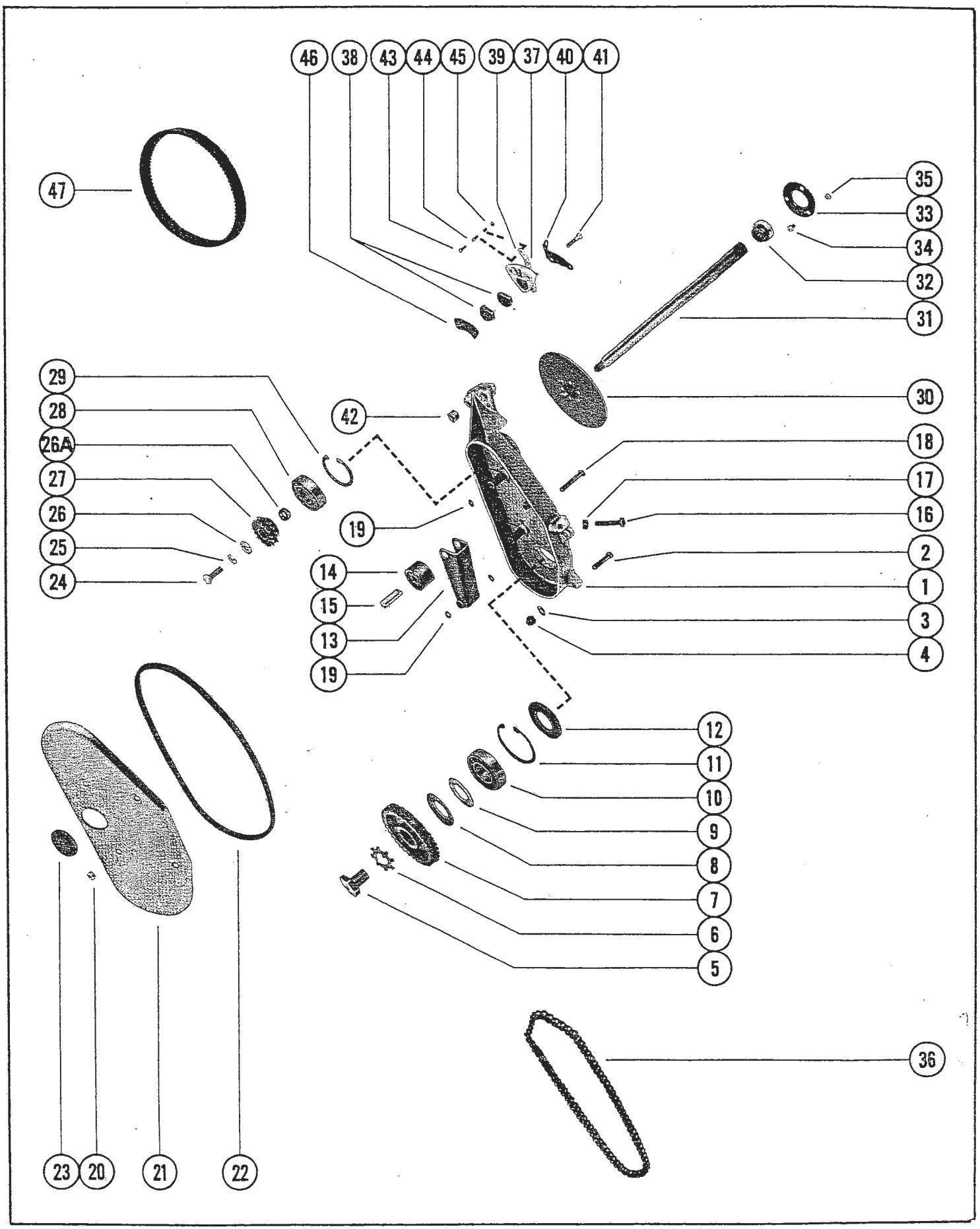

SLIDE SUSPENSION FRAME (FRONT)

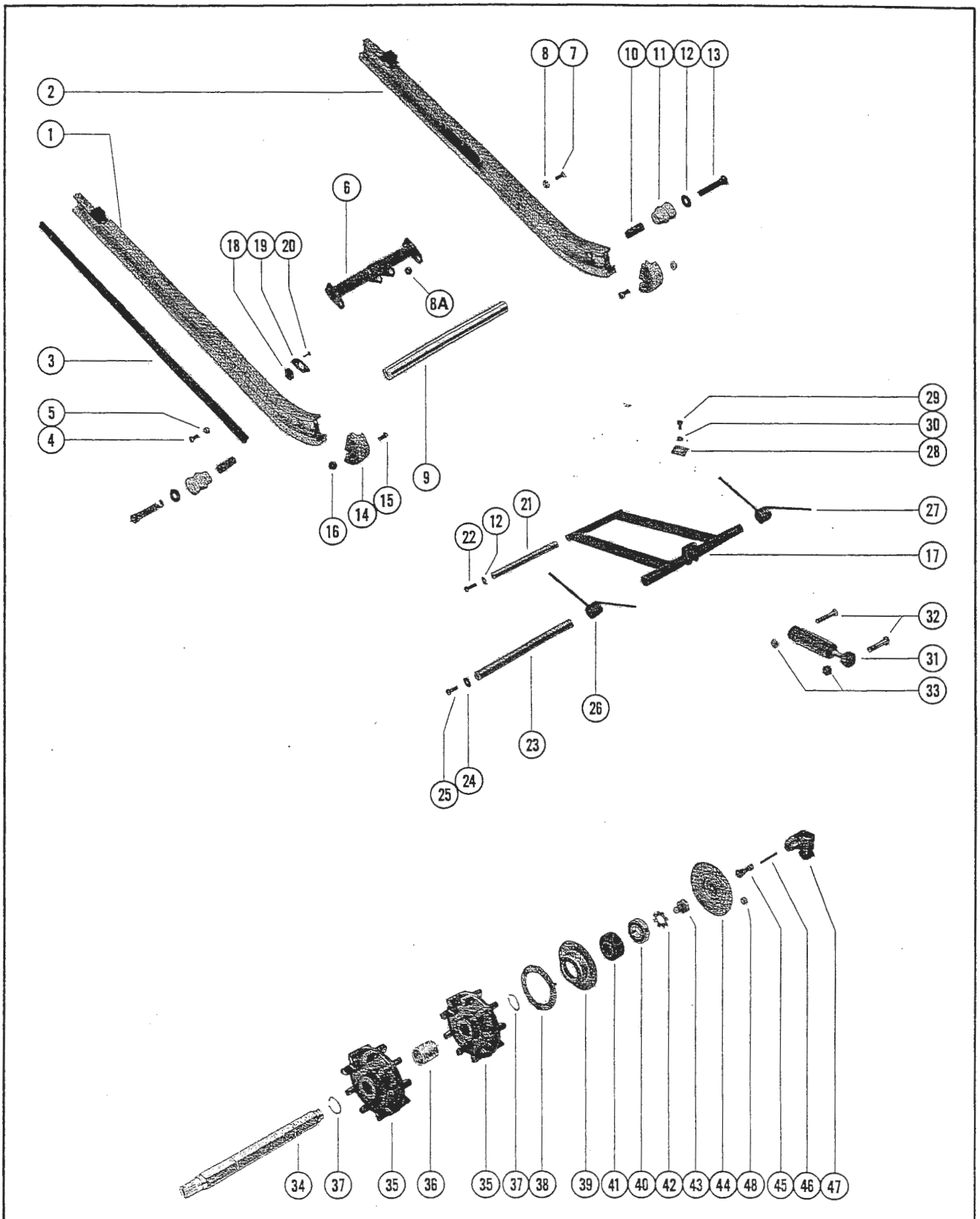

SLIDE SUSPENSION FRAME (FRONT)

PART NO.	REF. NO.	DESCRIPTION	QUAN.
●D-73486A3	1	Support Rail, right side	1
●D-73485A2	2	Support Rail, left side	1
●D-73489A1	3	Wear Bar, support rail (consists of 2 bars)	1
●C-10-73484	4	Screw, wear bar attaching (7/8")	4
C-11-20190	5	Nut, wear bar attaching screw	4
●D-72752	6	Crosstube, shock mounting	1
C-10-35786	7	Screw, crosstube attaching (1")	2
C-12-25909	8	Washer, crosstube attaching screw	2
C-11-23161	8A	Nut, crosstube attaching screw	2
D-71066	9	Shaft, front shock mount	1
D-71122	10	Tube, spring rest support	2
●D-73762	11	Rest, spring	2
C-12-27025	12	Washer, pivot shaft screw	4
C-10-67955	13	Screw, spring rest attaching (2 1/2")	2
D-71118	14	End Cap, slide frame	2
C-10-20189	15	Screw, end cap to slide rail (3/4")	4
C-11-20190	16	Nut, end cap to slide rail screw	4
●D-73749A1	17	Control Arm Assembly, front	1
D-71184	18	Bumper, control arm	2
●D-73781	19	Retainer, control arm bumper	2
C-17-63410	20	Rivet, retainer and bumper attaching	8
D-71065	21	Shaft, pivot - control arm	1
C-10-67953	22	Screw, pivot shaft to slide frame (1 1/4")	2
●D-74306	23	Shaft, pivot - front control arm	1
C-12-48241	24	Washer, front pivot shaft screw	4
C-10-67951	25	Screw, front shaft attaching (1 1/4")	4
●C-24-74016	26	Spring, support rail - right side	1
●C-24-74015	27	Spring, support rail - left side	1
A-67612A2	28	Mount Assembly, slide suspension spring	2
C-10-26801	29	Screw, spring mount assembly to chassis (5/8")	2
C-12-48241	30	Washer, spring mount screw	2
●D-55-73780	31	Shock Absorber, front	1
C-10-32995	32	Screw, shock absorber mounting (2")	2
C-11-34933	33	Nut, shock absorber screw	2
D-45-67564	34	Drive Shaft, snow track	1
D-67565A1	35	Sprocket Assembly, drive shaft (consists of 2 sprockets)	1
D-67566	36	Spacer, sprocket - drive shaft (1 29/32")	1
C-53-69121	37	Snap Ring, sprocket retaining	2
D-68514	38	Ring, drive shaft	1
D-59428	39	Retainer, drive shaft bearing	1
C-30-67733	40	Ball Bearing, drive shaft	1
D-58403	41	Mount, rubber - drive shaft bearing	1
C-14-61371	42	Tab Washer, drive shaft	1
C-10-67571	43	Screw, drive shaft	1
D-59427	44	Cover, drive shaft bearing - 340 T/T	1
D-72141	44	Cover, drive shaft bearing - 440 T/T	1
D-53978	45	Bushing, speedometer drive	1
D-60026	46	Key, drive - speedometer (440 T/T)	1
●D-74254	47	Angle Drive, speedometer (440 T/T)	1
C-11-45592	48	Nut, cover to retainer	3

SLIDE SUSPENSION (REAR) AND BOGIE WHEEL KIT

PART NO.	REF. NO.	DESCRIPTION	QUAN.
●D-71021	1	Bracket, support rail - right side	1
●D-71020	2	Bracket, support rail - left side	1
C-10-35786	3	Screw, support rail attaching	12
C-12-25909	4	Washer, support rail attaching screw	12
C-11-23161	5	Nut, support rail attaching screw	12
●D-73460	6	Rear Bracket - right side	1
●D-73459	7	Rear Bracket - left side	1
●D-74162	8	Shaft, shock absorber mounting	1
●D-55-73779	9	Shock Absorber, slide suspension	1
D-68597	10	Cam, spring adjustment	2
D-67057	11	Retainer, spring	2
C-24-67436	12	Spring, shock absorber	2
C-12-27025	13	Washer, shock absorber mounting screw	8
●C-10-74161	14	Screw, shock mounting (4") - lower	2
C-10-67955	15	Screw, shock mounting (2 1/2") - upper	2
D-71152	16	Spacer, shock mounting	2
D-70651	17	Bumper, slide rail	2
D-70650	18	Retainer, bumper	2
C-17-65346	19	Rivet, bumper retainer to rail	4
●D-72546	20	Control Arm, rear	1
D-71068	21	Shaft, rear control arm	1
C-12-25909	22	Washer, shaft attaching screw	2
●D-73793	23	Shaft, rear control arm	1
●D-73355	24	Guide, track	2
C-10-67951	25	Screw, control shaft - front	2
●D-73792	26	Spacer, idler wheel - outer	2
●D-73352	27	Shaft, rear control arm	1
D-67415	28	Axle, idler wheel - slide suspension	1
D-71048	29	Spacer, idler wheel	2
D-67416	30	Idler Wheel, rear axle	3
C-12-70936	31	Washer, idler wheel	2
C-10-67951	32	Screw, idler wheel axle	2
D-71116	33	Spacer, tracket adjustment	2
C-11-23161	34	Nut, track adjustment spacer	2
●D-74398A1	35	Snow Track	1
●D-74838A1	36	Track Bar Assembly	AR
D-68786	37	Fastener, track bar	AR
●D-75060A1	--	Bogie Wheel Kit	Opt.

SLIDE SUSPENSION (REAR) AND BOGIE WHEEL KIT

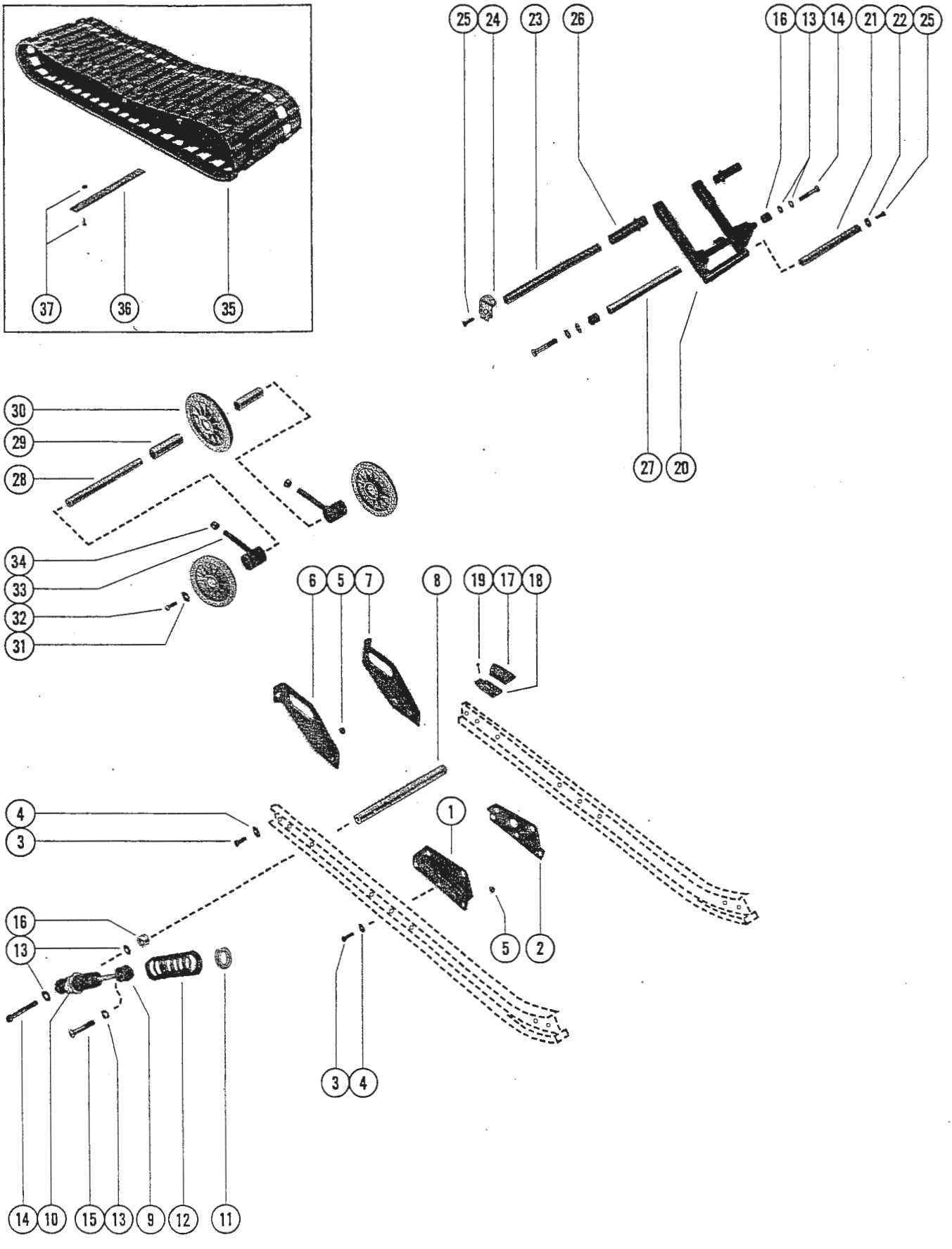

HANDLEBAR AND STEERING LINKAGE

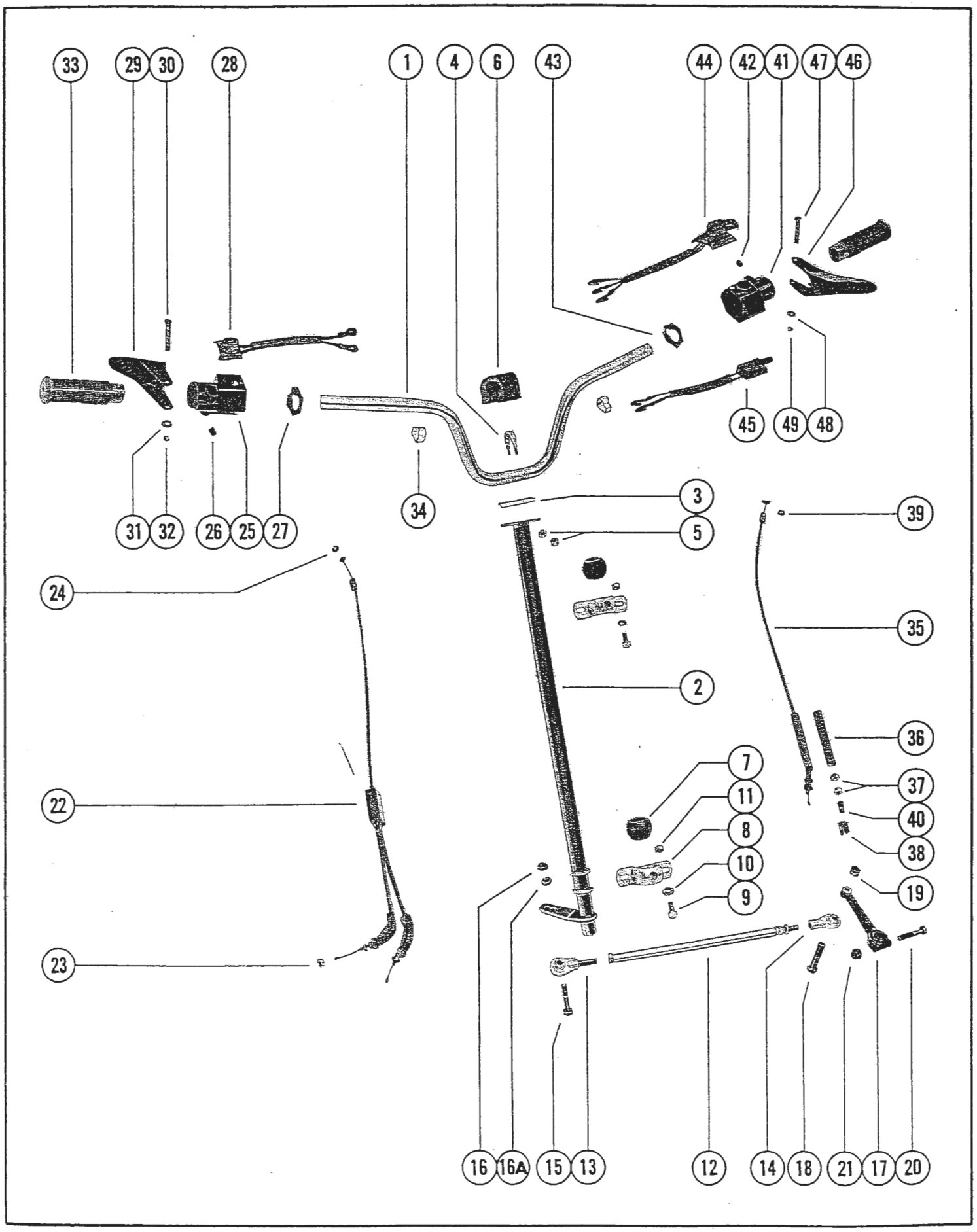

HANDLEBAR AND STEERING LINKAGE

PART NO.	REF. NO.	DESCRIPTION	QUAN.
D-67602	1	Handlebar, steering shaft	1
●D-72968	2	Steering Shaft	1
D-67603	3	Clamp, handlebar to steering shaft	1
C-10-70701	4	"U" Clamp, handlebar to steering shaft	2
C-11-67980	5	Nut, handlebar to steering shaft "U" clamp	4
D-72165	6	Cover, handlebar	1
C-23-48957	7	Bushing, steering shaft mounting bracket	2
D-69148	8	Pillow Block, mounting - steering shaft	2
C-10-69088	9	Screw, mounting bracket to dash support	4
C-12-57792	10	Washer, mounting bracket to dash support screw	4
C-11-35814	11	Nut, mounting bracket to dash support screw	4
D-67912	12	Tie Rod Assembly	2
D-67598	13	End Assembly, tie rod - right hand (male)	2
D-67599	14	End Assembly, tie rod - left hand (female)	2
C-10-29096	15	Screw, steering shaft to tie rod end (2 1/2")	1
C-11-23161	16	Nut, steering shaft to tie rod end screw	1
C-11-20101	16A	Nut, steering shaft to tie rod end screw	1
D-66766	17	Arm, steering	2
C-10-53833	18	Screw, steering arm to end assembly (2")	2
C-11-23161	19	Nut, steering arm to end assembly screw	2
C-10-31830	20	Screw, steering arm to spindle (1 7/8")	2
C-11-49197	21	Nut, steering arm to spindle screw	2
D-67540	22	Cable, throttle control	1
C-11-68595	23	Nut, jam - throttle cable to carburetor	2
C-53-68594	24	Snap Ring, throttle cable to throttle lever	1
●D-73753	25	Throttle Control Lever Assembly	1
●C-10-74936	26	Screw, set - throttle control mount to handlebar	1
●D-74935	27	Cover, throttle control mount	1
●D-87-74937	28	Kill Switch	1
●D-74931	29	Lever, throttle control	1
●C-17-74932	30	Pin, throttle control lever attaching	1
●C-12-74933	31	Washer, throttle control lever pin	1
●C-53-74934	32	Ring, retaining - throttle lever pin	1
D-64349	33	Grip, handlebar	2
C-54-68448	34	Clip, brake and throttle control leads to handlebar	2
D-68129	35	Cable, brake control	1
C-24-68593	36	Spring, reinforcing - brake cable	1
C-11-28770	37	Nut, brake cable to mounting bracket	1
D-61380	38	Clevis, brake cable mounting	1
C-53-68594	39	Snap Ring, brake cable to brake lever	1
●C-24-74269	40	Spring, brake cable return	1
●D-73754A1	41	Brake Control Lever Assembly	1
C-10-74936	42	Screw, set - brake control mount to handlebar	1
●D-74939	43	Cover, brake control mount	1
●D-87-74940	44	Dimmer Switch	1
●D-87-74941	45	Brake Switch	1
●D-74938	46	Lever, brake control	1
C-17-74932	47	Pin, brake control lever attaching	1
C-12-74933	48	Washer, brake control lever pin	1
C-53-74934	49	Ring, retaining - brake lever pin	1

STEERING SPINDLE AND SKI ASSEMBLY

PART NO.	REF. NO.	DESCRIPTION	QUAN.
C-23-67553	1	Bushing, steering spindle (upper)	2
C-23-67554	2	Bushing, steering spindle (lower)	2
D-66767	3	Spindle, steering	2
C-22-31345	4	Fitting, grease - steering spindle	2
C-23-67721	5	Spacer, steering spindle	2
C-10-61087	6	Screw, steering spindle to ski (3")	2
C-11-34933	7	Nut, steering spindle screw	2
D-71444	8	Bumper, ski	2
D-71445	9	Retainer, front	2
D-71446	10	Retainer, rear	2
D-67473	11	Pivot, leaf spring and shock mount	2
C-10-52498	12	Screw, pivot and leaf spring (1 1/2")	4
C-11-34933	13	Nut, pivot and leaf spring clamping screw	4
C-24-71485	14	Spring, leaf (#3)	2
C-24-71486	15	Spring, leaf (#2)	2
C-24-67472	16	Spring, leaf (#1)	2
C-23-56727	17	Bushing, bottom leaf spring (rear)	2
C-10-52409	18	Screw, leaf spring to ski - rear (3 1/4")	2
C-11-23161	19	Nut, rear leaf spring screw	2
D-70953	20	Plate, back - leaf spring pivot	2
C-10-49293	21	Screw, leaf spring to ski (front) (3")	2
C-23-56744	22	Bushing, bottom leaf spring (front)	2
C-11-23161	23	Nut, front leaf spring screw	2
D-53288	24	Bumper, rubber - leaf spring	2
D-71484	25	Retainer, leaf spring bumper	2
D-67474	26	Wear Strip, ski - front	2
D-67960A1	27	Ski Assembly	2
D-67961	28	Wear Skeg Assembly, ski	2
C-12-63034	29	Washer, wear skeg stud	8
C-11-52677	30	Nut, wear skeg stud	8
C-55-67520	31	Shock Absorber	2
C-10-61087	32	Screw, shock absorber to ski (3")	4
C-23-68828	33	Spacer, shock absorber	8
C-11-34933	34	Nut, shock absorber screw	4

STEERING SPINDLE AND SKI ASSEMBLY

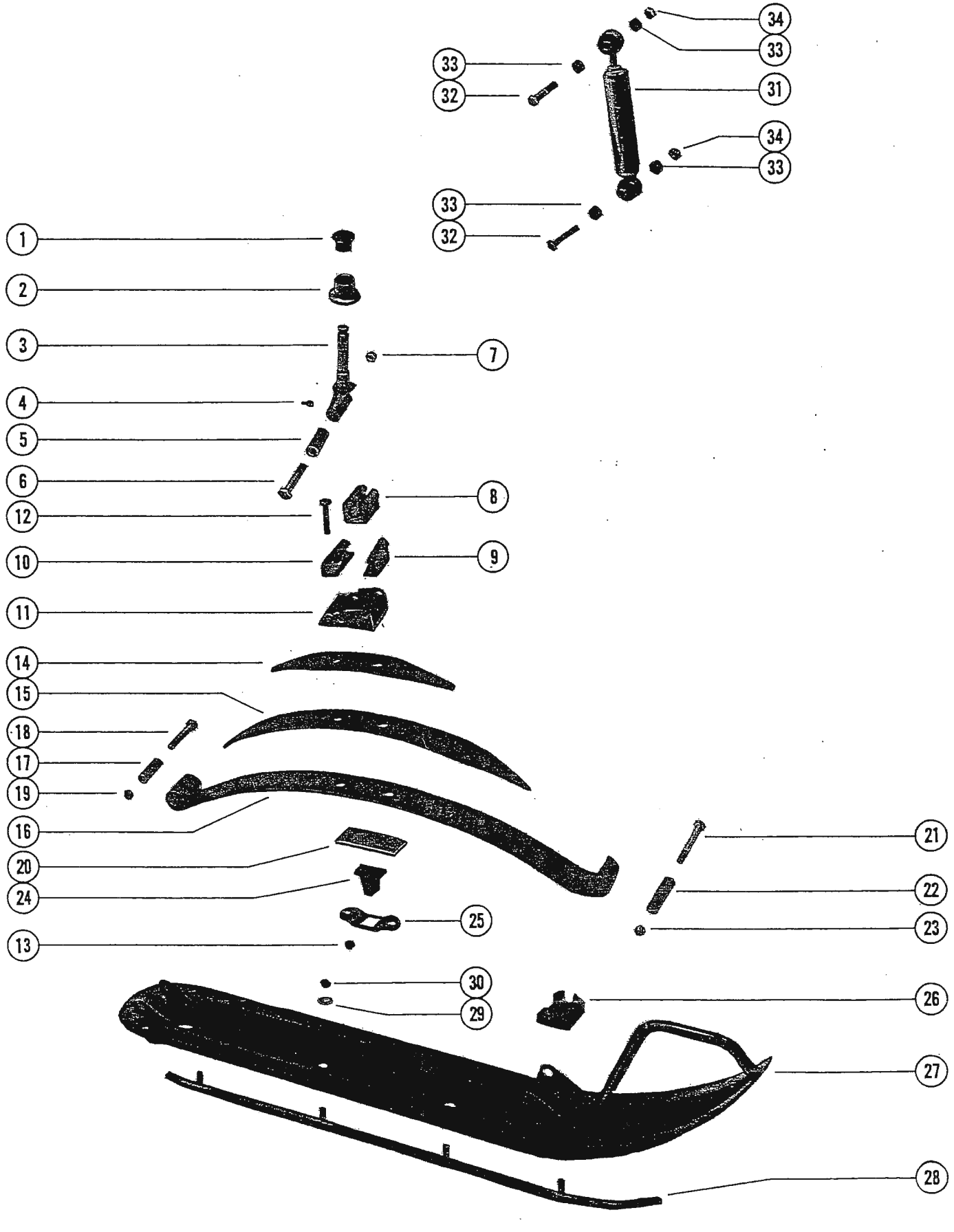

DASHBOARD, WIRING HARNESS AND SEAT CUSHION

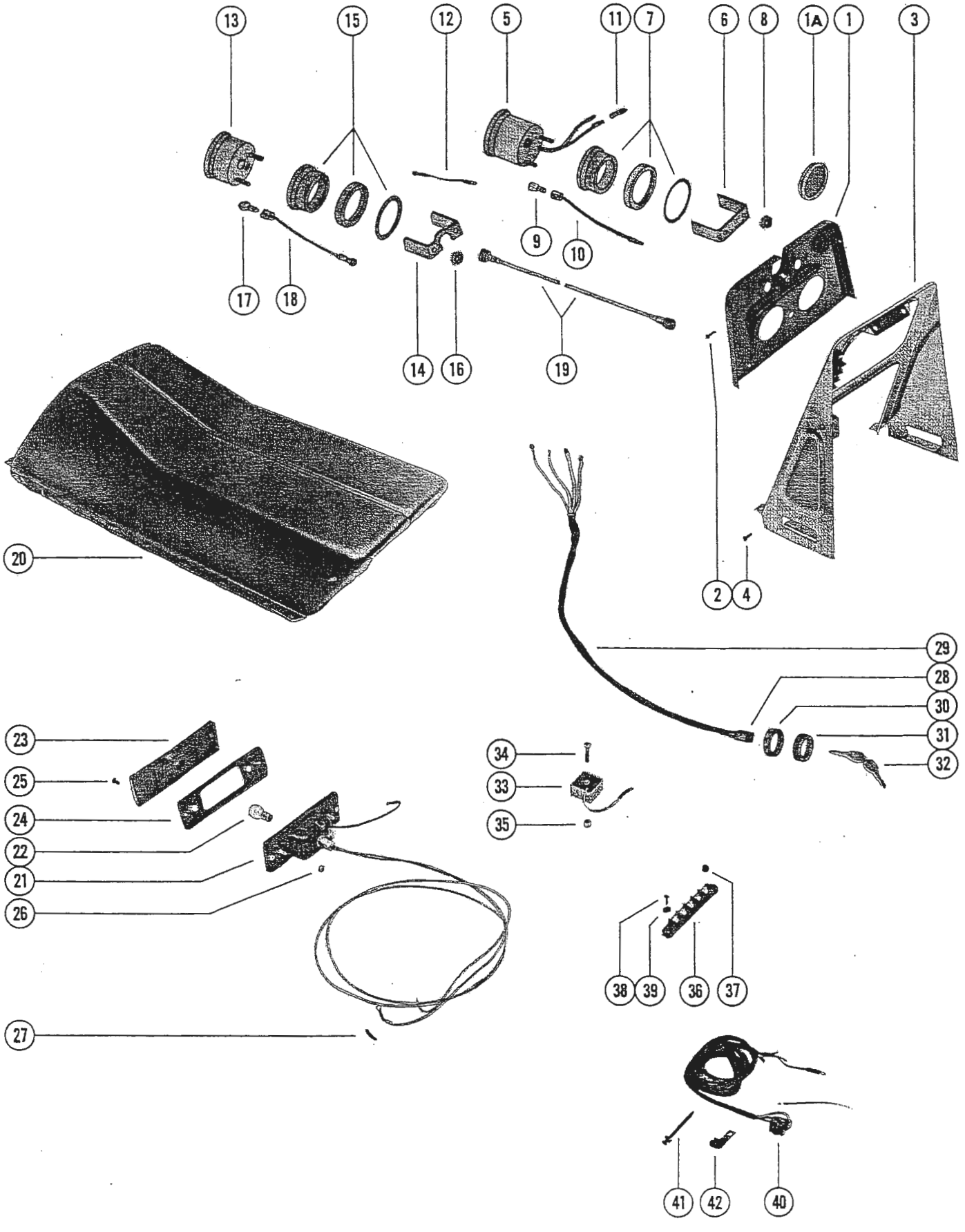

DASHBOARD, WIRING HARNESS AND SEAT CUSHION

PART NO.	REF. NO.	DESCRIPTION	QUAN.
D-72120	1	Dashboard	1
D-66839	1A	Cap, dash	2
C-17-68230	2	Rivet, dashboard to dash support	4
D-67555A1	3	Dash Support Assembly	1
C-17-68245	4	Rivet, dash support to chassis	14
D-79-71185A1	5	Tachometer	1
D-72580	6	Bracket, tachometer	1
D-72583A1	7	Mount Assembly	1
C-11-72586	8	Nut, bracket terminals	2
C-32878	9	Light Bulb, tachometer	1
D-72581	10	Socket and Cable Assembly, light bulb	1
D-57908-2	11	Sleeve, heat reactive - terminals	3
D-84-60466A7	12	Cable, ground strap	1
D-79-71186	13	Speedometer	1
D-72576	14	Bracket, speedometer	1
D-72583A1	15	Mount Assembly	1
C-11-72586	16	Nut, bracket terminals	2
C-32878	17	Light Bulb, speedometer	1
D-72578	18	Socket and Cable Assembly, light bulb	1
D-71187	19	Cable, drive - speedometer	1
D-70804	20	Seat Cushion	1
D-88-70992	21	Tail and Stop Light Assembly	1
D-88-65361	22	Light Bulb, tail and stop light	1
D-67804	23	Lens, tail and stop light	1
C-27-67803	24	Gasket, tail and stop light	1
C-10-67805	25	Screw, lens and gasket attaching (3/8")	2
C-11-20190	26	Nut, tail and stop light to chassis mount	2
D-57908-2	27	Sleeve, heat reactive - brake and tail light harness	2
D-87-64132	28	Switch, key	1
D-84-70994	29	Harness, key switch	1
C-23-63425	30	Spacer, key switch	1
D-63423	31	Bezel, key switch	1
D-63270	32	Key, ignition switch	1
D-69362A1	33	Voltage Regulator Assembly	1
C-10-35156	34	Screw, voltage regulator attaching (1 1/4")	1
C-11-53210	35	Nut, voltage regulator attaching screw	1
D-86-68160	36	Terminal Block	1
C-11-21806	37	Nut, terminal block	5
C-17-53567	38	Rivet, terminal block to dash support	2
C-12-21273	39	Washer, terminal block to dash support rivet	2
D-84-70991	40	Wiring Harness	1
D-61990	41	Sta-Strap, wiring harness	10
C-54-64235-1	42	"J" Clip, headlight harness to cowl hinge bolt (1/4")	2
C-54-63153	42	"J" Clip, headlight harness to cowl hinge (13/64")	7
C-54-46997	42	"J" Clip, headlight harness to cowl hinge (13/64")	2
C-54-47483	42	Clip, engine harness attaching	2

440 T/T

NOTE: When ordering replacement keys, also list letter stamped on key. Example: D-63270-W

DRIVE SHEAVE AND DRIVEN SHEAVE ASSEMBLY

PART NO.	REF. NO.	DESCRIPTION	QUAN.
D-52-74385	-	Sheave Assembly, driven	1
D-74115	1	Sheave and Hub Assembly, driven - fixed	1
C-28-74116	2	Key, locating - sliding driven sheave	1
C-23-74117	3	Bushing, sheave	1
D-74118	4	Sheave Assembly, driven - sliding	1
D-74119	5	Wear Plate, sliding driven sheave	3
D-24-74120	6	Spring, return - sliding driven sheave	1
D-74121	7	Bracket, torque	1
D-53-74122	8	Ring, retaining - torque bracket	1
D-52-74255	-	Sheave Assembly, drive - 340 T/T	1
D-52-74256	-	Sheave Assembly, drive - 440 T/T	1
D-71719	9	Face and Hub Assembly, fixed	1
D-71720A1	10	Cover Assembly, drive sheave	1
C-10-71726	11	Screw, cover attaching	3
C-12-71728	12	Washer, cover attaching screw	3
D-71721	13	Spider, sliding driver sheave	1
C-10-71714	14	Screw, spider attaching	3
C-11-71727	15	Nut, spider attaching screw	3
C-53-71723	16	Ring, split-spider	1
C-23-71729	17	Spacer, spring	AR
C-12-71730	18	Washer, spring	1
C-24-71517	19	Spring, fixed face hub	1
C-17-71718	20	Pin, clutch weight to arm	3
D-71717	21	Clutch Weight - 340 T/T (106)	6
D-74125	21	Clutch Weight - 440 T/T (286)	6
C-11-71713	22	Nut, roller arm	3
D-74123	23	Ramp, cover assembly - 340 T/T (292)	3
D-74124	23	Ramp, cover assembly - 440 T/T (293)	3
C-10-71725	24	Screw, arm attaching	3
C-13-26995	25	Lockwasher, arm attaching screw	3
D-71724	26	Roller Assembly, spider	1
C-10-71741	27	Screw, drive unit to crankshaft	1
C-12-71742	28	Lockwasher, drive unit screw	1
C-12-67568	29	Washer, driven sheave	AR
C-53-36128	30	Ring, retaining - driven sheave	1
C-28-74372	31	Key, driven shaft to driven sheave	1

To maintain peak snowmobile performance when operating at high altitude (5000 feet and above), the following parts must be installed.

	340 T/T QUAN.	
D-1393-6150A1	1	Carburetor Kit
D-1393-6143	2	Main Jet (160)
D-1393-6145	2	Main Jet (180)
N.S.S.	2	Needle Jet
N.S.S.	2	Pilot Jet (25)
D-74124A1	1	Clutch Kit
D-74124	3	Ramp (293)
D-71736	6	Weight (107)
D-71737	6	Weight (135)
D-23-71729	2	Spacer
D-64684	1	Sprocket (14)
D-69514	1	Chain (76 P.L.)

	440 T/T QUAN.	
D-1393-5874A2	1	Carburetor Kit
D-1393-5873	2	Main Jet (240)
D-1393-5874	2	Pilot Jet (30)
D-71716A1	1	Clutch Kit
D-71716	6	Weight (105)
D-71734	6	Weight (123)
D-23-71729	2	Spacer
D-63318A1	1	Sprocket (15)
D-69514	1	Chain (76 P.L.)

DRIVE SHEAVE AND DRIVEN SHEAVE ASSEMBLY

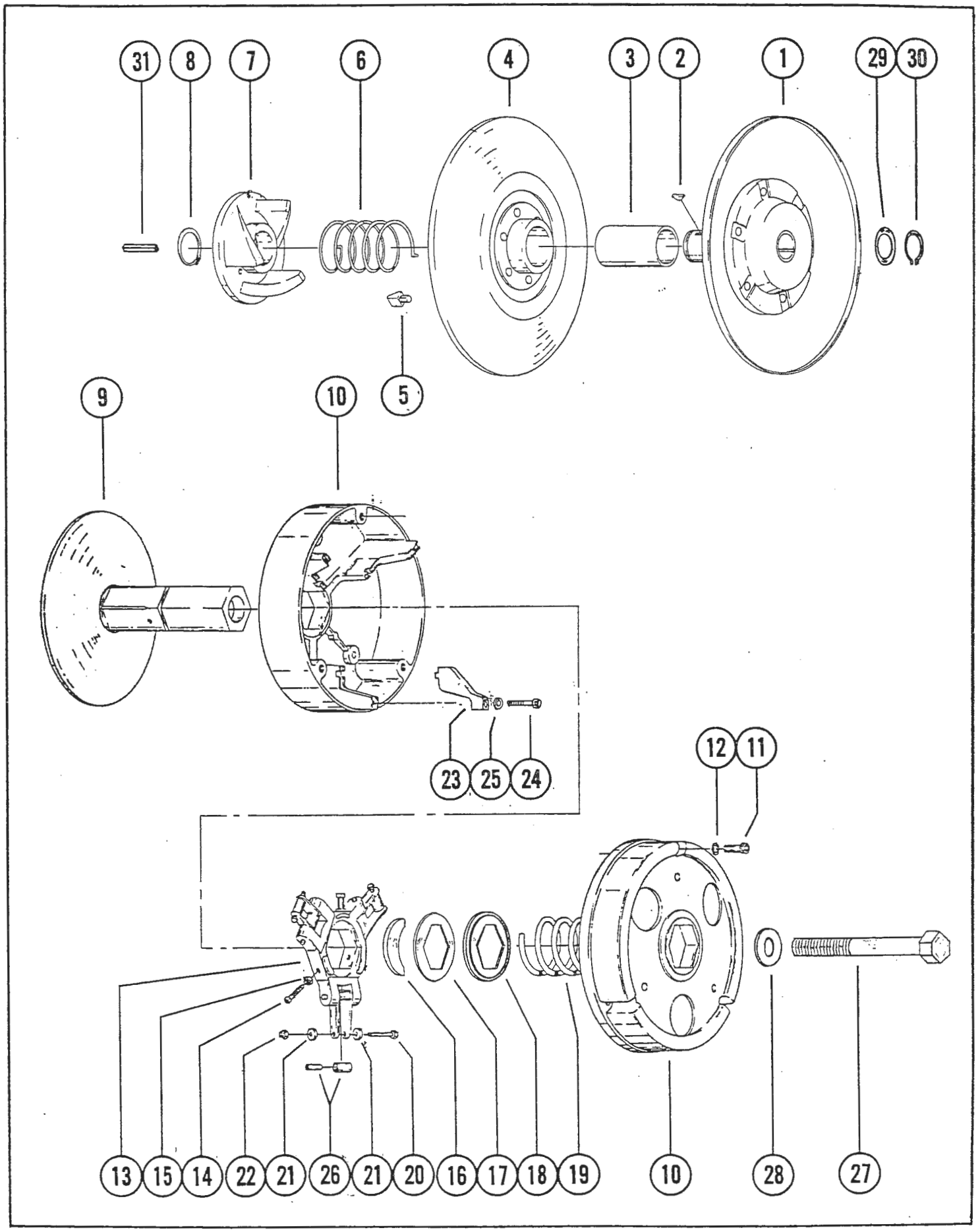

IGNITION COIL, TRIGGER AND FLYWHEEL ASSEMBLY

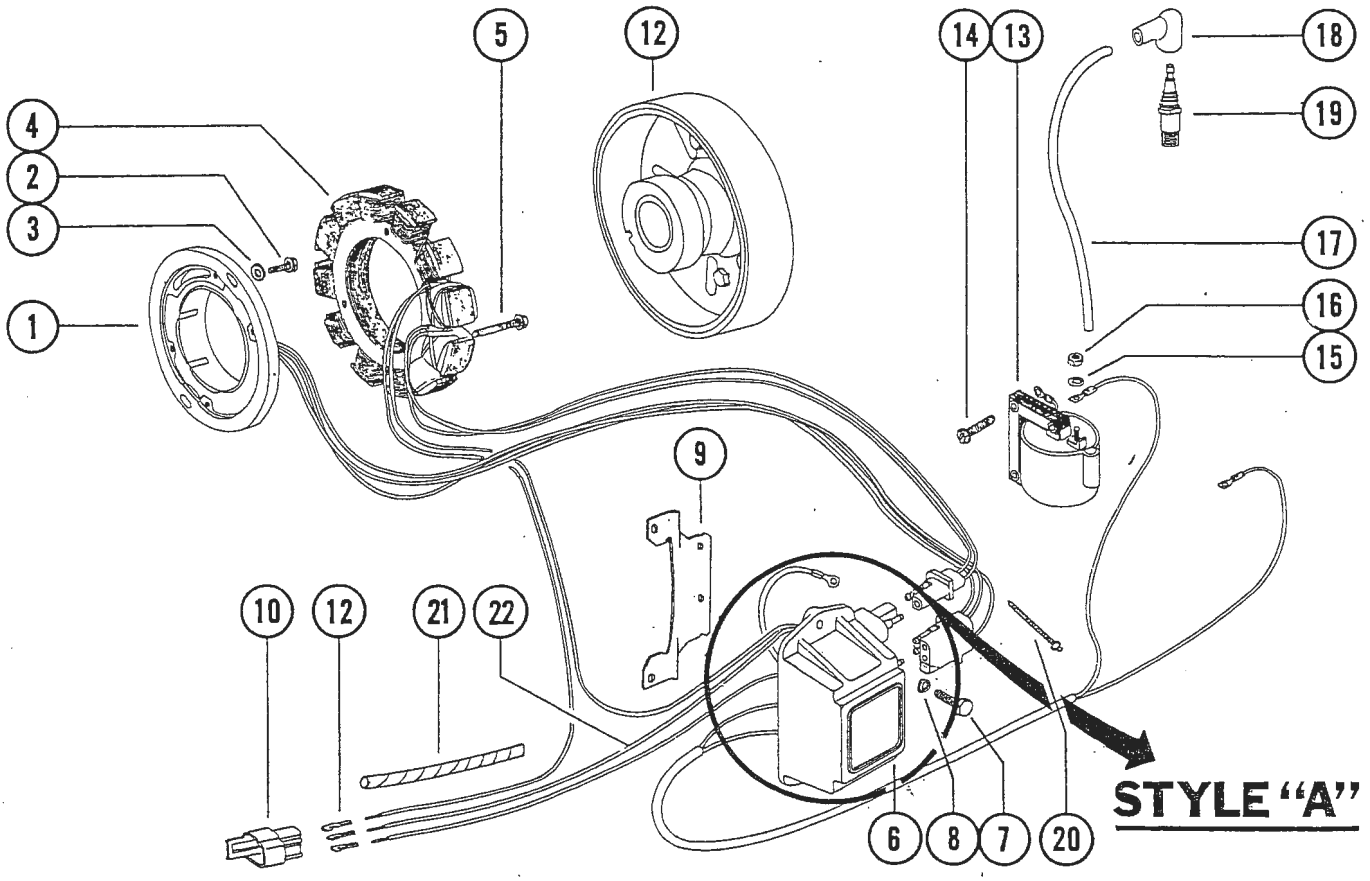

PART NO.	REF. NO.	DESCRIPTION	QUAN.
D-67851	1	Trigger Plate Assembly	1
C-10-69982	2	Screw, trigger plate to bell housing	2
C-12-71240	3	Washer, trigger plate to bell housing screw	2
D-67857	4	Stator, ignition	1
C-10-67869	5	Screw, stator to bell housing	4
D-67856	6	Electronic Pack	1
C-10-67181	7	Screw, electronic pack to engine	2
C-12-67187	8	Lockwasher, electronic pack to engine screw	2
D-71765	9	Mounting Plate, electronic pack	1
C-85-62761	10	Insulator, wiring harness	1
C-86-62725	11	Connector, harness	3
D-67860	12	Flywheel	1
D-67852	13	Ignition Coil	2
C-10-68565	14	Screw, ignition coil to coil mounting bracket	8
C-13-68566	15	Lockwasher, ignition coil terminal	2
C-11-68564	16	Nut, ignition coil terminal	2
A-84-63212A2	17	Lead Assembly, high tension (17")	2
A-47604A1	18	Protector Assembly, high tension lead	2
C-33-73271	19	Spark Plug	2
D-61990	20	Sta-Strap, harness to mounting plate	2
D-38473	21	Spiral Wrap, harness	1
A-84-72602	22	Lead Assembly, white	1

STYLE "A"
PLUG IN CONNECTION AT SWITCH BOX

IGNITION COIL, TRIGGER AND FLYWHEEL ASSEMBLY

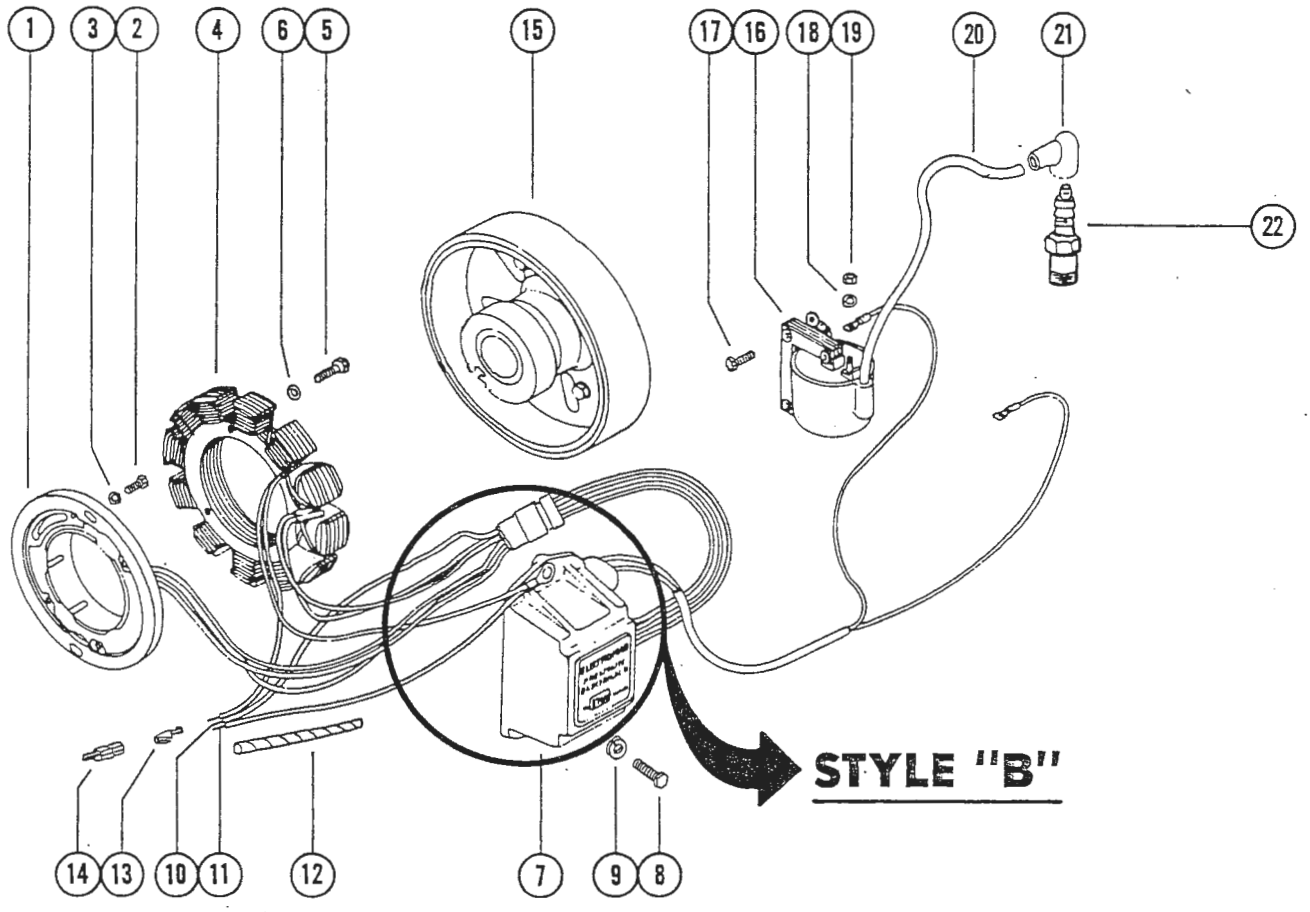

PART NO.	REF. NO.	DESCRIPTION	QUAN.
D-72600	1	Trigger Plate Assembly	1
C-10-69982	2	Screw, trigger plate to bell housing	2
C-12-71240	3	Washer, trigger plate to bell housing screw	2
D-72599	4	Stator, ignition	1
C-10-67869	5	Screw, stator to bell housing	4
C-12-71240	6	Washer, stator to bell housing screw	4
D-72598	7	Electronic Pack	1
C-10-67181	8	Screw, electronic pack to engine	2
C-12-67187	9	Lockwasher, electronic pack to engine screw	2
C-84-72601	10	Lead Assembly, black	1
C-84-72602	11	Lead Assembly, white	1
C-38473	12	Spiral Wrap, harness	2
C-86-62725	13	Connector, harness	3
C-85-62761	14	Insulator, wiring harness	1
D-67860	15	Flywheel	1
D-67852	16	Ignition Coil	2
C-10-68565	17	Screw, ignition coil to coil mounting bracket	4
C-13-68566	18	Lockwasher, ignition coil terminal	2
C-11-68564	19	Nut, ignition coil terminal	2
C-84-63212A2	20	Lead Assembly, high tension (17")	2
C-85-71006A1	21	Protector Assembly, high tension lead	2
D-33-73271	22	Spark Plug	2

STYLE "B"
PLUG IN CONNECTIONS IN SWITCH BOX WIRES

MUFFLER AND ENGINE MOUNTING PLATE

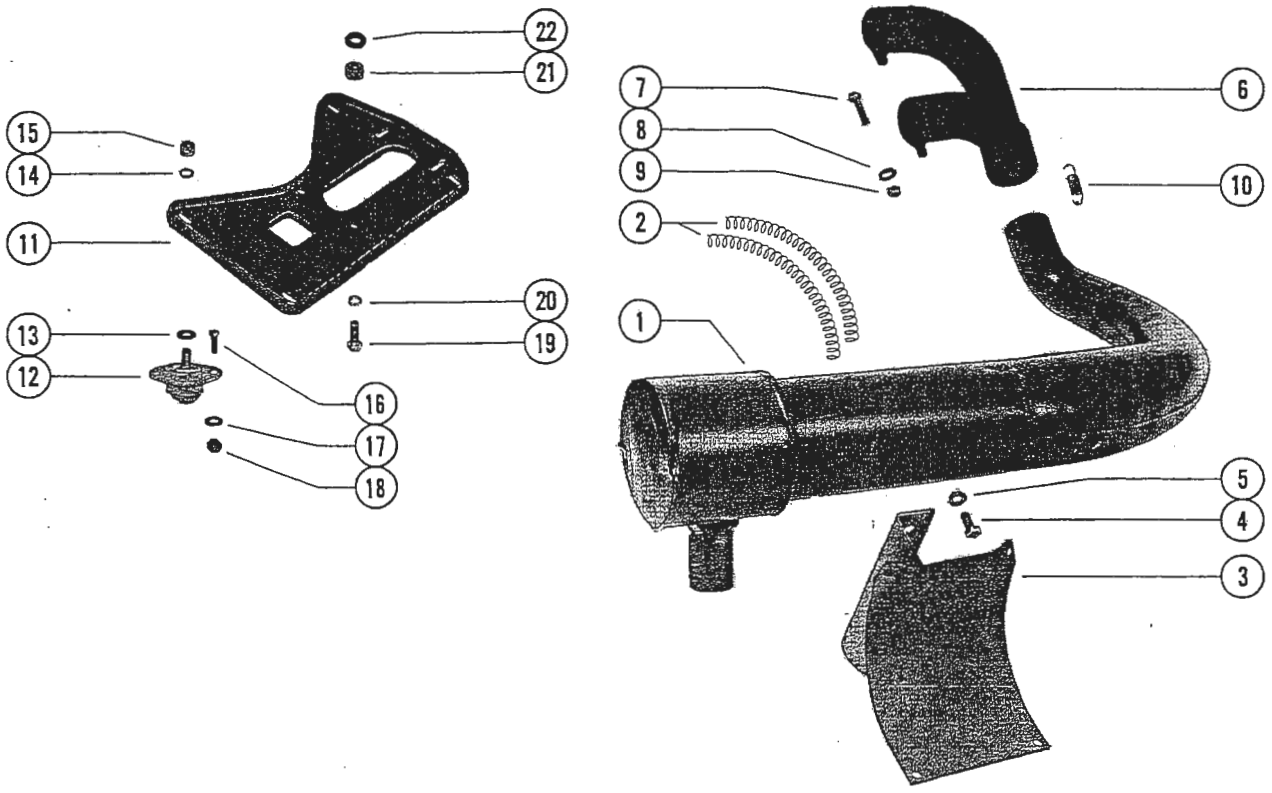

PART NO.	REF. NO.	DESCRIPTION	QUAN.
D-42-73849	1	Muffler, exhaust	1
C-24-66630	2	Spring, muffler retaining	2
D-71901	3	Bracket, muffler	1
C-10-59645	4	Screw, muffler bracket to crossmember (3/4")	2
C-13-39107	5	Lockwasher, muffler bracket screw	2
D-71662	6	Exhaust Manifold	1
C-10-69029	7	Screw, exhaust manifold to engine (1 3/4")	2
C-13-26992	8	Lockwasher, exhaust manifold screw	2
C-11-20361	9	Nut, exhaust manifold screw	2
C-24-63237	10	Spring, exhaust pipe attaching	2
D-73761	11	Plate, engine mounting	1
D-70950A1	12	Mount Assembly, engine plate to chassis crossmember	4
C-12-70936	13	Washer, engine plate to mount assembly screw	4
C-12-27025	14	Washer, mounting plate to mount assembly screw	4
C-11-23161	15	Nut, engine plate to mount assembly screw	4
C-10-60300	16	Screw, mount assembly front crossmember (3/4")	8
C-12-34714	17	Washer, mount to front crossmember	8
C-11-20361	18	Nut, mount to front crossmember screw	8
C-10-55337	19	Screw, mounting plate to crankcase (1 3/4")	4
C-12-25909	20	Washer, mounting plate to crankcase screw	4
C-12-27025	20	Washer, mounting plate to crankcase screw - PTO side	2
C-23-73778	21	Spacer, mounting plate to engine	4
C-12-25790	22	Washer, mounting plate to engine	4