Foreword

This manual is designed primarily for use by snowmobile mechanics in a properly equipped shop. However, it contains enough detail and basic information to make it useful to the snowmobile user who desires to perform his own basic maintenance and repair work. A basic knowledge of mechanics, the proper use of tools, and workshop procedures must be understood in order to carry out maintenance and repair satisfactorily. Whenever the owner has insufficient experience or doubts his ability to do the work, the adjustments, maintenance, and repair should be carried out only by qualified mechanics.

In order to perform the work efficiently and to avoid costly mistakes, the mechanic should read the text, thoroughly familiarize himself with the procedures before starting work, and then do the work carefully in a clean area. Whenever special tools or equipment is specified, makeshift tools or equipment should not be used. Precision measurements can only be made if the proper instruments are used, and the use of substitute tools may adversely affect safe operation of the snowmobile.

Whenever you see the symbols shown below, heed their instructions! Always follow safe operating and maintenance practices.

WARNING

This warning symbol identifies special instructions or procedures which, if not correctly followed, could result in personal injury, or loss of life.

CAUTION

This caution symbol identifies special instructions or procedures which, if not strictly observed, could result in damage to, or destruction of equipment.

NOTE: Indicates points of particular interest for more efficient and convenient operation.

This manual is divided into the following four sections:

(1) Specifications

This section contains general and technical specifications, a complete torque chart and engine performance curves.

(2) Maintenance and Theory of Operation

The procedures for inspection, adjustments and minor repair are described in this section. An explanation on the structure and function of each of the major components and assembly enables the mechanic to better understand what he is doing.

(3) Repair

This section shows the best method for removal, disassembly, inspection, assembly, and installation which are necessary for proper maintenance and repair. Assembly and installation notes are provided to explain special points.

(4) Appendix

The appendix in the back of the manual contains miscellaneous information, including metric reference and conversion charts, special tools, wiring diagram, and an index.

This shop manual has been prepared to assist the mechanic in servicing the KAWASAKI snowmobiles. All procedures contained within should be followed closely.

Quick Reference Guide

Using the quick reference guide will assist you in quickly locating a desired topic or procedure contained within this shop manual. Bend the pages back until you match the desired section above with the black tab on the right hand side of the table of contents for that section. Refer to the table of contents for the exact page(s) to locate the specific topic or procedure required.

Specifications

Table of Contents

1

General Specifications

GENERAL

Overall Length	102 in. (2,590 mm)
Overall Width	35.5 in. (902 mm)
Overall Height (With Windshield)	39.5 in. (1,003 mm)
Dry Weight (Approximate)	360 lb (163.2 kg)

ENGINE

Model	Type TA440B
Displacement	26.6 C.I. (436 cc)
Bore x Stroke	2.677 x 2.362 in. (68 x 60 mm)
Number of Cylinders	2
Engine RPM at Full Throttle	6,800 RPM
Engine RPM at Idle Speed	2,500 RPM
Starter	Manual rewind

IGNITION

Ignition System	Capacitor Discharge (C.D.)
Spark Plug	NGK BR-9EV

CARBURETOR

Carburetor Make	Mikuni
Carburetor Model	VM 34 Zinc
Identification Marking	34/179
Type of Carburetor	Open Vent
Main Jet	270
Air Jet	None
Jet Needle	6DH7-3
Needle Jet	Q-0
Throttle Slide (Cut Away)	0.079 in. (2.0 mm)
Pilot Jet	20
By Pass	0.055 in. (1.4 mm)
Pilot Outlet	0.031 in. (0.8 mm)
Air Screw	1.5 Turns
Float Valve Seat	0.059 in. (1.5 mm)
Starter Jet	0.079 in. (2.0 mm)
Type of Float Chamber	Standard
Starter System	Cable

FUEL/OIL

Gasoline	Regular leaded (minimum pump posted octane number 89)
Oil	Kawasaki Snowmobile Oil (B.I.A. certified T.C.W.)
Gasoline/Oil Ratio	(25 to 1) 1 quart (0.946 liters) of oil to 6.25 gallons (23.6 liters) of gasoline
Fuel Tank Capacity	6.5 gallons (24 liters)

DRIVE CONVERTER

Engagement Speed (approximate rpm)	3,800
Drive Converter rpm	6,800
Spring Part Number and Color (Standard)	050786 (Green)
Spring Part Number and Color (Optional)	050939 (Red) 050760 (Yellow)
Spring Length - New with no load*	4 in. (Red) (101.6 mm) 4.35 in. (Green) (110.4 mm) 4.35 in. (Yellow) (110.4 mm)
Number of Spring Coils (All Colors)	5
Spring Wire Diameter	
(Standard)	0.192 ± 0.005 in. (4.8 ± 0.1 mm) (Green)
(Optional)	0.176 ± 0.010 in. (4.4 ± 0.2 mm) (Red) 0.187 ± 0.005 in. (4.7 ± 0.1 mm) (Yellow)
Spring Rate	
(Standard)	64 lb/in. (1.14 kg/mm) (Green)
(Optional)	42 lb/in. (0.75 kg/mm) (Red) 50 lb/in. (0.89 kg/mm) (Yellow)
Spring Compression	
(Standard)	198 lb @ 1.25 in. (89.8 kg @ 31.7 mm) (Green)
(Optional)	116 lb @ 1.25 in. (52.6 kg @ 31.7 mm) (Red) 155 lb @ 1.25 in. (70.3 kg @ 31.7 mm) (Yellow)
Spring Outside Diameter	
(Standard)	2.375 ± 0.125 in. (60.32 ± 3.17 mm) (Green)
(Optional)	2.375 ± 0.25 in. (60.32 ± 6.3 mm) (Red) 2.375 ± 0.125 in. (60.32 ± 3.17 mm) (Yellow)
Weight Part Number (Standard)	050934
Ramp Part Number	050933
Weight - Total gram weight (Standard)	47.148 grams
Weight Markings	0146 - 105

Optional Weights			
Part Number	Color	Markings	Gram Weight
050779	Black	0146-135	4.479
050777	White	0146-107	4.958
050845	Black	0146-279	5.457
050776	Red	0146-106	5.958
050835	Black	0146-278	6.475
050778	Yellow	0146-123	6.992
050934	Black	0146-105	7.858
050836	Red	0146-286	8.800
050803	Green	0146-136	9.279

*After approximately 50 miles, the spring will take a set and lose 0.25 (1/4) of an in. of its total length. No significant loss of spring compression will occur because of the decreased spring length.

DRIVEN CONVERTER

Cam Angle	30°
Spring Part Number	050774
Spring Color	Black
Spring Length - New with no load	4.2 in. (107 mm)
Spring Diameter	2.880 in. (73.15 mm)
Spring Wire Diameter	0.155 in. (3.94 mm)
Spring Preload - Counterclockwise	2nd hole - 120°

BELT

Part Number	05065504
Outside Circumference	43.5 ± 0.25 in. (1,104.9 ± 6.4 mm)
Width - Top surface	1.25 + 0.06 – 0.00 in. (31.7 + 1.55, – 0.00 mm)
Thickness - Top of belt to bottom of lug	0.56 ± 0.03 in. (14.2 ± 0.8 mm)
Belt Taper Angle	30°

BRAKE

Minimum Brake Pad Thickness	1/16 in. (1.58 mm)

GEARING

Top Sprocket	22 teeth
Lower Sprocket	37 teeth
Sprocket Overall Ratio	1.68 to 1
Chain - (Silent Type)	92 pitch
Drive Chain Tension	Self Adjusting
Chain Tensioner Spring Color	Green

TRACK AND SUSPENSION

Track Type	Rubber (External Drive Lug)
Track Width	15 in. (381 mm)
Track Length	116 in. (2,946.4 mm)
Suspension	Slide rail

ELECTRICAL COMPONENTS

Type	12 VAC, 120 W
Headlight	040630 12 V, 60/60 W
Tail/Brake Light	G.E. 1157
Instrument Lights	G.E. 53 12 V - 3.4 W

FRAME

Frame	Aluminum alloy and HSLA steel construction

Service Specifications

ENGINE

Effective Compression Ratio	7.3 to 1
Top Ring/Groove Clearance	0.009 in. (max) (0.22 mm)
Bottom Ring/Groove Clearance	0.008 in. (max) (0.19 mm)
Piston Ring End Cap (Top)	0.008 - 0.016 in. (0.2 - 0.4 mm)
Piston Ring End Gap (Bottom)	0.008 - 0.016 in. (0.2 - 0.4 mm)
Piston Skirt Clearance	0.002 - 0.004 in. (0.05 - 0.10 mm)
Connecting Rod Radial Play	0.0008 - 0.001 in. (0.02 - 0.03 mm)
Connecting Rod Side Clearance	0.016 - 0.020 in. (0.4 - 0.5 mm)
Connecting Rod Small End Diameter	0.787 - 0.789 in. (20.0 - 20.05 mm)
Crankshaft End Play (Max)	0.019 in. (0.48 mm)
Crankshaft Run Out (Max)	0.002 in. (T.I.R.) (0.05 mm)

IGNITION

Spark Plug Gap	0.020 - 0.024 in. (0.5 - 0.6 mm)
Ignition Timing (Dynamic)	18° @ 6,500 RPM
Ignition Timing (B.T.D.C.)	0.073 in. (1.86 mm)

MAGNETO COIL RESISTANCE TESTS

Item	Ohmmeter Leads Connected Between	Resistance
Lighting Coil	Yellow-Yellow	0.18 ohm ± 20%
Exciter Coil	Red-Ground	128 ohms ± 20%
Pulser Coil	Red-White	23 ohms ± 20%

IGNITION COIL RESISTANCE TESTS

Item	Ohmmeter Leads Connected Between	Resistance
Primary winding	Blue-Ground	0.37 ohm ± 20%
†Secondary winding	High Tension-High Tension	10,200 ohms ± 20%
+Spark Plug Cap	Terminals at each end of cap	5,000 ohms ± 20%

† Remove Spark plug caps.

NOTE: Defective coils cannot always be detected using this test alone. Use of a coil tester which simulates operating conditions is the recommended test method.

CARBURETOR

Air Screw Setting	1.5 turns off seat
Idle Screw Setting	3 turns open from coil bound initial (2,500 RPM final)

CHASSIS

Converter Offset Distance	0.454 in. (11.5 mm)
Converter Center Distance	10.3 in. (262 mm)
Drive Chain Tension	Self Adjusting
Brake Lever Movement	3/4 in. (19 mm)
Track Tension	3/4 in. (19 mm) maximum deflection - 5 to 8 lbs (2.2 to 3.6 kg) pull
Steering Alignment	Skis parallel or 1/8 in. toe out
Tie Rod End Adjustment Stud Jam Nut Dimension	1-1/4 in. (32 mm) maximum

GENERAL ENGINE TORQUE SPECIFICATIONS

Cylinder Head Bolts	16 ft lb (2.2 kg-m)
Crankcase Bolts and Nuts	15 ft lb (2.1 kg-m)
Flywheel Nut	60 ft lb (8.3 kg-m)
Recoil Bolt	50 in. lb (0.6 kg-m)
Spark Plug	20 ft lb (2.7 kg-m)

Torque Chart and Loctite Table

Description	Quantity	Torque	Loctite
ENGINE MOUNT AND EXHAUST			
Engine rubber mount - nuts	4	30 ft lb (4.15 kg-m)	
Muffler mounting - nuts	4	10 ft lb (1.38 kg-m)	
Engine mounting - bolts	4	30 ft lb (4.15 kg-m)	
ELECTRICAL SYSTEM			
Key switch - nut	1	Hand tighten	
Voltage regulator mounting - nut	1	95 in. lb (1.09 kg-m)	
Brake and throttle lever - lock screw	1	25 in. lb (0.29 kg-m)	
Tail lamp lens mounting - screws	2	50 in. lb (0.058 kg-m)	
Head lamp housing mounting - bolts	4	11 ft lb (1.52 kg-m)	
Headlamp rim mounting - screw	1	50 in. lb (0.58 kg-m)	
DRIVE CONVERTER			
Spider assembly roller bearing mounting - nuts	3	35 - 48 in. lb (0.40 - 0.55 kg-m)	
Spider assembly - set screws	3	35 - 48 in. lb (0.40 - 0.55 kg-m)	
Spider assembly - set screw - nuts	3	35 - 48 in. lb (0.40 - 0.55 kg-m)	
Ramp mounting - screws	3	24 - 30 in. lb (0.28 - 0.35 kg-m)	
Movable sheave to bearing housing mounting - socket screws	3	15 - 17 ft lb (2.07 - 2.35 kg-m)	
Drive converter assembly to crankshaft - bolt	1	55 - 60 ft lb (7.61 - 8.30 kg-m)	

Description	Quantity	Torque	Loctite
DRIVEN CONVERTER AND BRAKE			
Disc brake to stationary sheave mounting - screw	3	95 in.lb (1.09 kg-m)	
Clevis retainer to cam mounting - bolt	1	95 in. lb (1.09 kg-m)	
Securing brake support bracket - nut	2	120 in. lb (1.38 kg-m)	
Caliper to mounting bracket - nut	1	19 ft lb (2.63 kg-m)	
CHAINCASE			
Chaincase mounting - nuts	4	28 ft lb (3.87 kg-m)	
Chaincase cover mounting - bolts	2	95 in. lb (1.09 kg-m)	
Top sprocket mounting - bolt	1	28 ft lb (3.87 kg-m)	242
Chaincase cover - plugs	2	20 in. lb (0.23 kg-m)	
Speedometer drive adapter	1	Hand Tighten	
Bearing support assembly to clevis mounting - nut	1	95 in. lb (1.09 kg-m)	
Tensioner to chaincase - nut	1	120 in. lb (1.38 kg-m)	
Bottom sprocket mounting - nut	1	55 ft lb (7.61 kg-m)	
Bearing support to shaft - bolt	1	19 ft lb (2.63 kg-m)	
SUSPENSION			
Track adjusting jam - nuts	2	35 ft lb (4.84 kg-m)	
Rear suspension bracket mounting - nuts	4	17 ft lb (2.35 kg-m)	
Mounting screws - washer to limiters	20	95 in. lb (1.09 kg-m)	
Rear axle support brackets mounting - bolts	8	95 in. lb (1.09 kg-m)	
Axle bracket mounting - bolts	8	95 in. lb (1.09 kg-m)	
Limiters to front suspension arm mounting - bolts	2	95 in. lb (1.09 kg-m)	
Shock absorber to rear suspension arm - nut	1	30 ft lb (4.15 kg-m)	
Eye bolts to suspension brackets - nuts	4	Adjust	
Screws to limiters - attaching nuts	2	95 in. lb (1.09 kg-m)	
Support brackets - attaching nuts	18	95 in. lb (1.09 kg-m)	
Wear strip attaching screws	4	60 in. lb (0.69 kg-m)	
Cross shaft mounting - bolts	2	28 ft lb (3.87 kg-m)	242
Upper idler shaft to chassis - mounting bolts	2	15 ft lb (2.07 kg-m)	242
Suspension brackets - front and rear mounting - bolts	8	25 ft lb (3.46 kg-m)	
Rear axle assembly - bolts	2	30 ft lb (4.15 kg-m)	
DRIVESHAFT			
Bearing housing mounting - bolts	3	95 in. lb (1.09 kg-m)	
SKI AND SPINDLE			
Skeg (ski wear runner) to ski - attaching nut	6	15 ft lb (2.07 kg-m)	
Spring to ski - attaching nuts	4	46 ft lb (6.36 kg-m)	
Shock absorber to ski and spindle - attaching nuts	4	35 ft lb (4.84 kg-m)	
Spindle to spring saddle - nut	2	35 ft lb (4.84 kg-m)	
Spring saddle to spring - nut	4	35 ft lb (4.84 kg-m)	

Description	Quantity	Torque	Loctite
STEERING			
LH tierod to steering pole - nut	1	15 ft lb (2.07 kg-m)	
Steering arms to tie rods - nut	2	35 ft lb (4.84 kg-m)	
Steering pole mounting - nuts, upper	2	17 ft lb (2.35 kg-m)	
Steering pole mounting - screws, lower	2	13 ft lb (1.80 kg-m)	242
Tie rod - jam nut - LH	2	100-120 in. lb (1.15-1.38 kg-m)	
Tie rod - jam nut - RH	2	100-120 in. lb (1.15-1.38 kg-m)	
RH tie rod to steering pole - nut	1	35 ft lb (4.84 kg-m)	
Handlebar to steering pole mounting - screws	4	15 ft lb (2.07 kg-m)	
Steering arm to spindle - nut	2	35 ft lb (4.84 kg-m)	
CHASSIS			
Snow flap mounting - bolts	4	95 in. lb (1.09 kg-m)	
Hood guide and front bumper mounting - bolts	12	95 in. lb (1.09 kg-m)	
Hood guide, front bumper and hood hinge attaching - nuts	18	95 in. lb (1.09 kg-m)	
Rear bumper and snow flap attaching - nuts	8	95 in. lb (1.09 kg-m)	
Passenger handles attaching - nuts	4	60 in. lb (0.69 kg-m)	
Pan brace attaching - bolts	2	95 in. lb (1.09 kg-m)	
FUEL SYSTEM			
Primer pump - nut	1	30 in. lb (0.35 kg-m)	
Fuel pump assembly mounting - bolts	2	95 in. lb (1.09 kg-m)	
Fuel pump assembly attaching - nuts	2	95 in. lb (1.09 kg-m)	
CABLES			
Throttle cable to carburetor - nut	1	6 ft lb (0.83 kg-m)	
Brake cable jam - nuts	2	12 ft lb (1.66 kg-m)	
Enrichener cable assembly	1	6 ft lb (0.83 kg-m)	
Enrichener cable - pal nut	1	Hand Tighten	
Speedometer cable	1	Hand Tighten	
CRANK AND PISTONS			
Flywheel - nut	1	60 ft lb (8.30 kg-m)	
CRANKCASE AND CYLINDER			
Cylinder head - nuts	8	16 ft lb (2.2 kg-m)	
Spark plug	2	20 ft lb (2.70 kg-m)	
Crankcase - bolts	14	16 ft lb (2.2 kg-m)	
INTAKE AND EXHAUST			
Carburetor holder mounting - bolt/washer assembly	2	40 in. lb (0.62 kg-m)	
Intake manifold - bolts	6	5 - 6 ft lb (0.69 - 0.83 kg-m)	
Exhaust manifold - nuts	4	12 ft lb (1.66 kg-m)	

Description	Quantity	Torque	Loctite
FAN CASE AND AIR SHROUD			
Fan shaft - nut	1	47 ft lb (6.5 kg-m)	
Air shroud mounting - screws	10	Use impact driver	222
Fan case halves mounting - bolts	6	5 - 6 ft lb (0.69 - 0.83 kg-m)	
Starter plate mounting - bolts	2	16 - 18 ft lb (2.2 - 2.5 kg-m)	
Fan case to crankcase mounting - bolts	5	10 - 12 ft lb (1.4 - 1.7 kg-m)	
Duct to engine - screws	2	32 in. lb (0.37 kg-m)	
CDI MAGNETO			
Stator plate mounting - screws	2	5 - 6 ft lb (0.69 - 0.83 kg-m)	
Wire clamps to stator plate mounting - screws	2	Use impact driver	
Exciter coil and pulser coil mounting - screws	2	Use impact driver	
Lighting coil mounting - screws	2	Use impact driver	
ELECTRICAL			
CDI igniter mounting - nuts	2	60 in. lb (0.69 kg-m)	
Ignition coil mounting - screw	1	5 - 6 ft lb (0.69 - 0.83 kg-m)	
RECOIL STARTER			
Drive plate mounting - nut	1	8 - 10 ft lb (1.11 - 1.38 kg-m)	
Starter pulley mounting - bolts	3	16 - 18 ft lb (2.2 - 2.5 kg-m)	
Starter mounting - bolts	4	5 - 6 ft lb (0.69 - 0.83 kg-m)	
HOOD			
Hood hinge - nuts	8	25 in. lb (0.29 kg-m)	
Hood latch band - screws	4	25 in. lb (0.29 kg-m)	
Lanyard to engine - screw	1	120 in. lb (1.38 kg-m)	
CONSOLE			
Console mounting - screws	6	95 in. lb (1.09 kg-m)	

NOTE: Loctite formulas are selected on the basis of the diameter of the fastener, and the strength of the bond required. Generally, No. 222 is used on fasteners up to 5/16 in. (8 mm) diameter. If a particularly strong bond is required, or the fastener diameter is greater than 5/16 in. (8 mm), No. 242 is specified. Loctite may significantly increase the torque necessary to remove a fastener. Be careful when applying extra force as this risks damaging the parts. Use only the specified formula on each fastener requiring Loctite. Loctite No. 222 and No. 242 are industrial designations. The consumer equivalent which may be substituted is Loctite "Lock 'n Seal," product number 21, blue.

Gear Ratio Chart

DRIVEN SPROCKET – NUMBER OF TEETH		Drive Sprocket - Number of Teeth					
		17	18	19	20	21	22
36	Gear Ratio Speed Chain Pitch Tensioner Spring		2.00 *65 MPH 90 Red	1.89 *69 MPH 90 Pink			1.64 *79 MPH 92 Red
37	Gear Ratio Speed Chain Pitch Tensioner Spring	2.18 *60 MPH 90 Red	2.06 *63 MPH 90 Green			1.76 *74 MPH 92 Red	1.68 *77 MPH 92 Green
38	Gear Ratio Speed Chain Pitch Tensioner Spring	2.24 *58 MPH 90 Green			1.90 *68 MPH 92 Red	1.81 *72 MPH 92 Green	
39	Gear Ratio Speed Chain Pitch Tensioner Spring			2.05 *63 MPH 92 Red	1.95 *67 MPH 92 Green		
40	Gear Ratio Speed Chain Pitch Tensioner Spring		2.22 *58 MPH 92 Pink	2.11 *61 MPH 92 Green			

*Theoretical MPH at 6,800 RPM
NOTE: All top speeds based on 1:1 converter ratio and engine RPM at 6,800.

Chain Tensioner Springs

Color	Length	Wire Dia.
Red	3.00 in. (76.20 mm)	0.049 in. (1.245 mm)
Orange	3.00 in. (76.20 mm)	0.055 in. (1.397 mm)
Pink	3.38 in. (85.85 mm)	0.049 in. (1.245 mm)
Yellow	3.38 in. (85.85 mm)	0.055 in. (1.397 mm)
Green	3.75 in. (95.25 mm)	0.049 in. (1.245 mm)
Blue	3.75 in. (95.25 mm)	0.055 in. (1.397 mm)

Port Dimensions

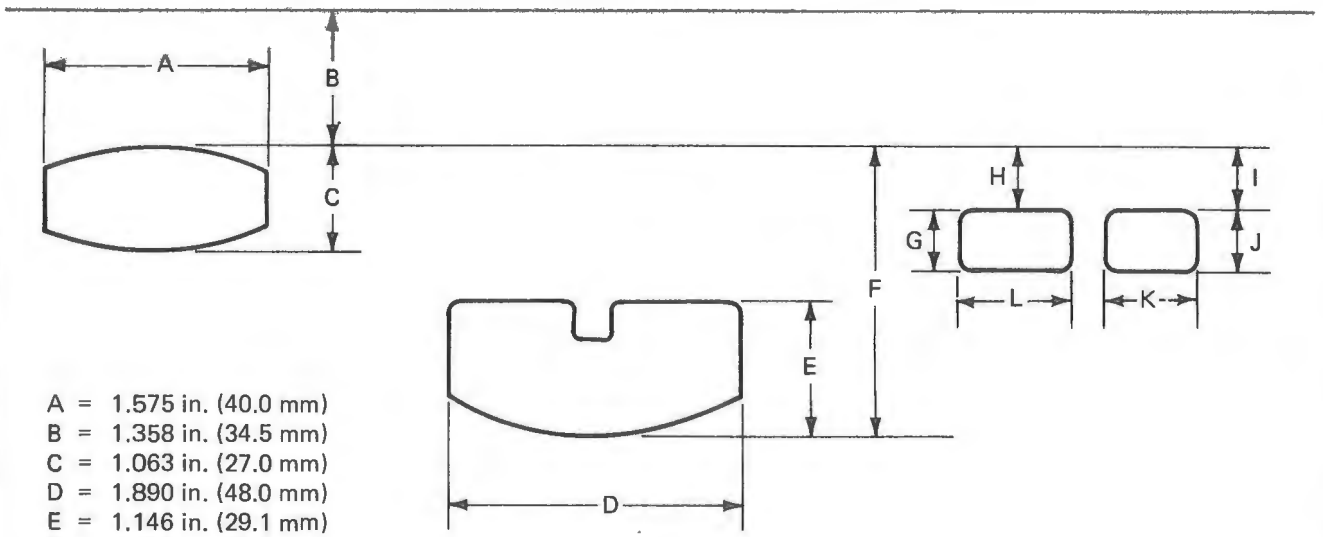

A = 1.575 in. (40.0 mm)
B = 1.358 in. (34.5 mm)
C = 1.063 in. (27.0 mm)
D = 1.890 in. (48.0 mm)
E = 1.146 in. (29.1 mm)
F = 3.764 in. (95.6 mm)
G = 0.516 in. (13.1 mm)
H = 1.906 in. (48.4 mm)
I = 1.906 in. (48.4 mm)
J = 0.516 in. (13.1 mm)
K = 0.787 in. (20.0 mm)
L = 0.787 in. (20.0 mm)

Engine Performance Curves

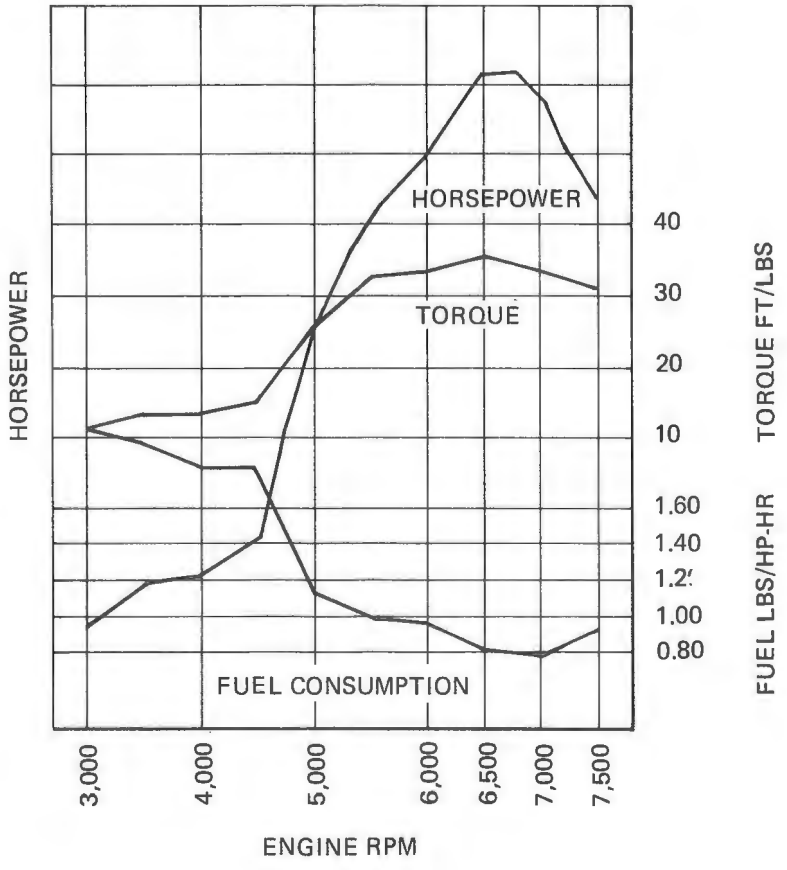

Maintenance and Theory

Table of Contents

2

Maintenance Chart

Operation \ Frequency	Beginning of Each Season	First 50-100 Miles or 5-10 Hours Use	Every 300 Miles or 20 Hours Use	Every 600 Miles or 40 Hours Use	Every 900 Miles or 60 Hours Use	End of Each Season	Page Reference
Install new spark plugs	x			x			2-29
Check carburetor adjustment	x	x					2-26
Check throttle cable adjustment	x	x			x		2-26
Check enrichener cable adjustment	x	x			x		2-26
Replace fuel filter					x		2-26
De-carbon engine and exhaust						x	3-48
Check axial fan belt	x	x			x		3-48
Check ignition timing		x					2-27
Replace drive belt (be sure converter pulleys are clean and dry)	x			x			2-34
Check drive converter and driven converter alignment	x				x		2-32
Check drive converter bushings for wear					x		3-64
Clean and inspect drive and driven converters					x		2-32
Check drive chain tensioner guides	x				x		2-36
Adjust track tension and check alignment	x	x	x				2-39
Check ski alignment	x			x			2-37
Adjust brake		x	x				2-36
Check fasteners for security (use torque chart as a guide)	x			x			1-6
Inspect ski runners for wear	x		x				2-38
Measure wear of slide rail wear strips	x		x				3-78
Adjust headlight	x						2-30

Lubrication Chart

Lubrication Point	Lubricant	Frequency	Illustration
CONTROL CABLES Inner cables	LPS, WD-40, Dri-Slide or similar low temperature lubricant.	Once a season and every 20 hours of operation.	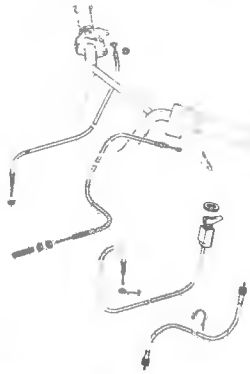
DRIVEN CONVERTER Ramp sliding surfaces	Low temperature grease.	Once a season and every 20 hours of operation.	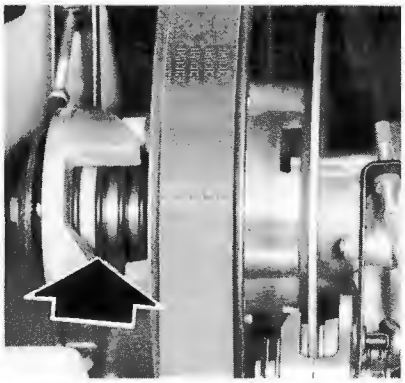
CHAINCASE HOUSING	Kawasaki Chain Lubricant.	Check level every 20 hours of operation.	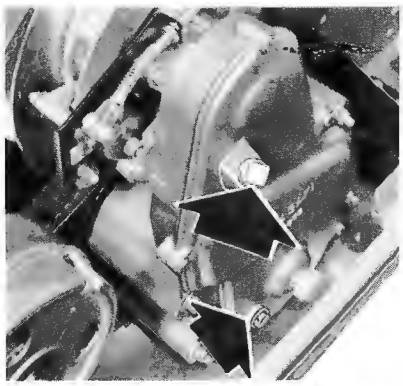

Two-Cycle Engine Theory of Operation

Introduction

All internal combustion engines are characterized by a four part cycle of operation. The four parts are: 1. Intake, 2. Compression, 3. Combustion, and 4. Exhaust.

A fuel/air mixture must be drawn into the efnn'-ine, compressed, burned, and exhausted.

A two-stroke engine uses only two strokes to accomplish all four parts.

Each of the four parts can be easily understood by following the path of the fuel/air mixture through the engine. (See Figure 2-1.)

1. Intake: On the upstroke of the piston a charge of fuel mixed with air is drawn into the engine through an open port in the cylinder.
2. Compression: Near the bottom of the downstroke, the intake port is closed, and the piston starts back up. This upstroke compresses the fuel/air mixture to a fraction of its former volume.
3. Combustion: When the mixture has been compressed, it is ignited and forces the piston down. This is called the power stroke.
4. Exhaust: After the power stroke, the burned gases exit through the now open exhaust port, and the cycle is ready to start again.

The piston is carried through each step from one power stroke to the next by the rotating inertia of the crankshaft.

The intake of a two-stroke engine is perhaps the most complex part of the cycle. After the fuel and air have been mixed in the carburetor, it is drawn into the crankcase. As the piston rises, a hole in the cylinder wall (the intake port) is uncovered by the lower edge of the piston. The rising piston effectively increases the volume of the crankcase, drawing in the mixture. On its return trip, the piston blocks the intake port and lightly compresses the mixture in the crankcase. At about 55°-60° BBDC (before bottom dead center), the upper edge of the piston uncovers ports in the cylinder wall that are connected to the crankcase. The mixture in the crankcase, under pressure, rushes through these transfer ports into the cyliner.

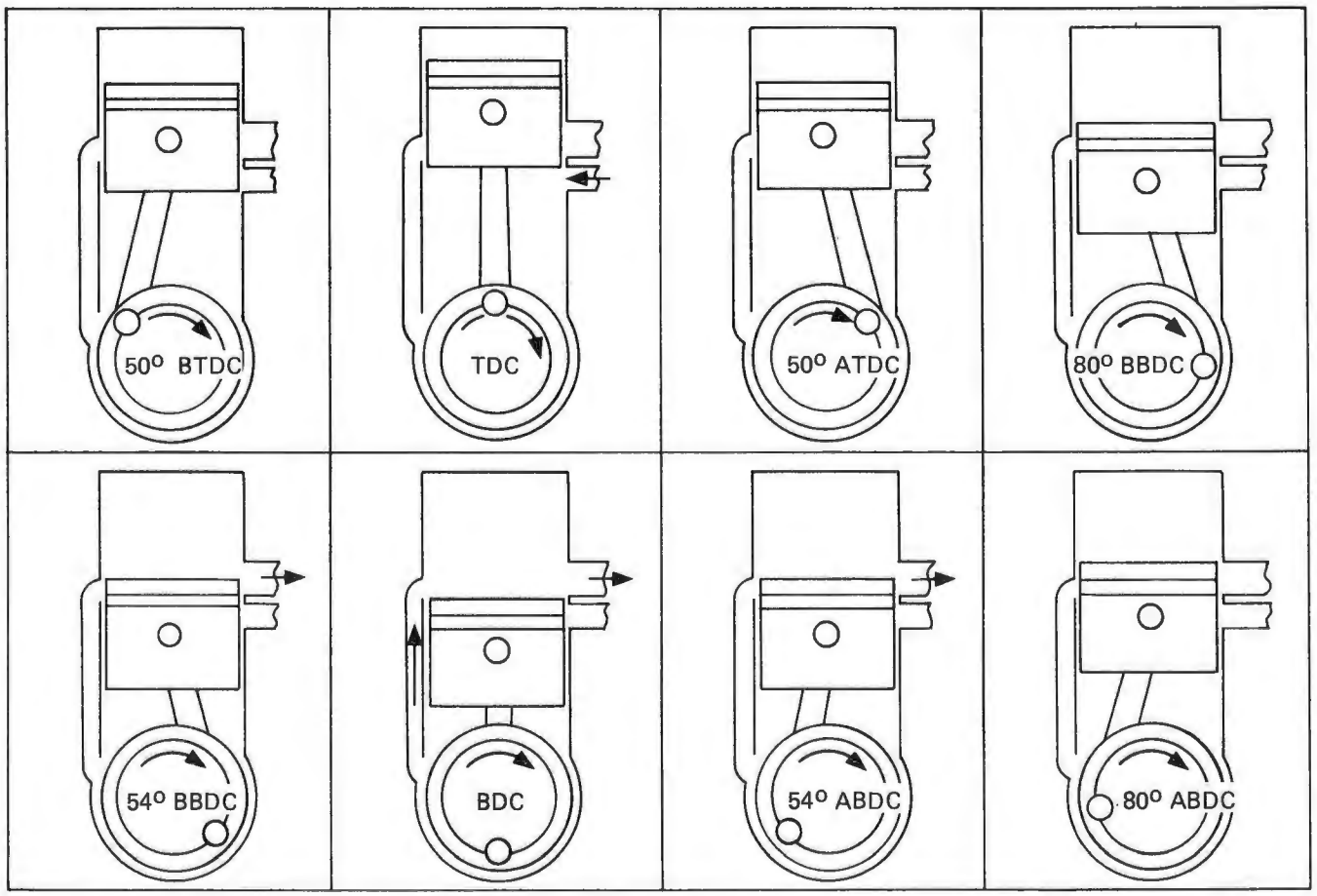

Figure 2-1

There are two separate intake actions: the first into the crankcase, and the second into the cylinder. In two-stroke terminology, only the first intake action is called the intake; the second is called the transfer or scavenging flow. The word "scavenge" is used because the new mixture flowing into the cylinder helps to clean the exhaust out of the combustion chamber.

After the piston passes BDC (bottom dead center) it rises, closing the transfer and exhaust ports, and opening the intake again. The mixture trapped above the piston is compressed as the piston nears TDC (top dead center), the spark plug is fired and the mixture starts burning.

The piston is driven downward by the combustion until the exhaust port is uncovered by the upper edge of the piston. The two-stroke engine goes through all four basic parts in just two strokes of the piston, and one complete rotation of the crankshaft.

Intake

A two-stroke engine's intake tract starts with the carburetor.

To get the mixture into the crankcase, there must be an opening from the crankcase to the carburetor bore. The intake timing is "symmetrical," it opens and closes the same number of degrees on either side of TDC. (See Figure 2-2.)

The fuel/air mixture in the intake tract has inertia, and takes a certain amount of time to get into the crankcase. The sooner the intake is opened, the more time there is to draw the mixture into the crankcase. If the intake is opened too soon, the crankcase pressure will be higher than atmospheric and the mixture will flow in the wrong direction. The transfers generally close at around 60° ABDC, which is the same as 120° BTDC. It would seem ideal to open the intake at about 115° BTDC, just after the transfer ports close. However, on a piston port engine this would require the intake to remain open until 115° ATDC as well, and all the crankcase pressure meant to transfer the mixture to the cylinder would be lost back out the open intake.

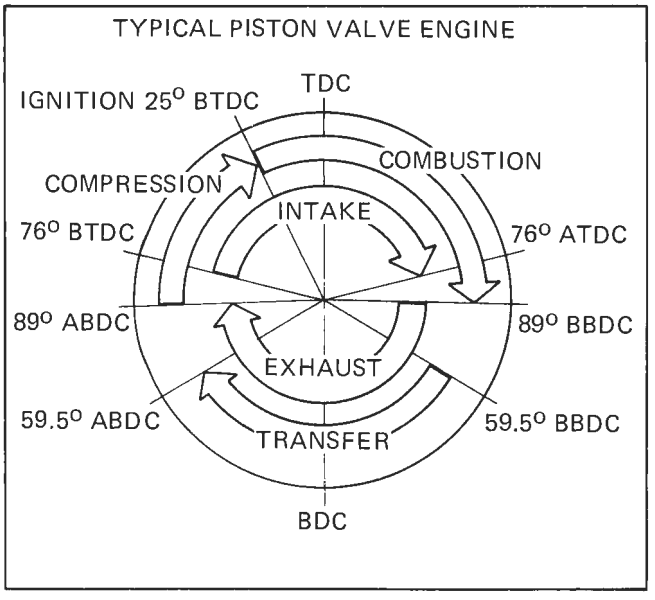

Figure 2-2

Transfer

Transfer ports are designed to move the fuel/air mixture from the crankcase to the cylinder, and to scavenge the exhaust from the cylinder. Because the exhaust port opens before the transfers do, the exhaust gases are already traveling in the right direction. As the pressure in the cylinder drops, the exhaust will no longer flow of its own accord. The transfer ports aim the incoming fuel/air mixture in such a way that it will sweep throughout the cylinder, pushing the exhaust gases toward the exhaust port.

The size and shape of the transfer ports are important for efficient scavenging. If they are too small, the transfer flow will be restricted. If the port is too large, the flow speed will drop. The lack of inertia of the gases will affect the direction of the flow after it leaves the port, resulting in poor scavenging. The transfer port passage is part of the crankcase volume. The larger the passage, the lower the crankcase pressure.

Timing of the transfer ports runs from about 60° BBDC to about 60° ABDC. The transfer ports cannot open until after the exhaust does or the exhaust would flow into the crankcase. This would mix the new charge and the exhaust, resulting in less power (or none at all). Transfer port timing is symmetrical about BDC. The closing point of the transfer port is important to good cylinder filling. If open too long, some of the mixture will flow back into the crankcase.

Compression

Compression occurs as the piston on its upstroke closes the intake and exhaust ports and compresses the fuel/air mixture in the cylinder to a fraction of its original volume. To achieve compression of any kind, the cylinder must be mechanically sealed.

The cylinder head, in most engines, is separate from the cylinder itself. The joining surface between the head and the cylinder is sealed against both compression and combustion by the "head gasket." This gasket must be capable of withstanding high temperatures and pressures. Some head gaskets are simply a sheet of copper or aluminum. Others are a sandwich of copper and asbestos sheets. The head must be fastened tightly to the cylinder, squeezing the head gasket with just the right amount of force to keep it from leaking.

The piston is a close fit in the cylinder bore, but the final seal is made by piston rings. These are special cast iron rings which circle the piston in grooves and press outward against the cylinder wall to prevent leakage of compression or combustion past the piston. The piston rings must withstand high temperatures and pressures without deforming while rubbing constantly up and down on the cylinder wall.

Most engines have one or two compression sealing piston rings. Their job is to seal the gap between the piston and cylinder.

New piston rings must be "broken in." The new rings do not conform exactly to tiny irregularities of the cylinder wall, but they gradually wear to fit. This initial wear is the break-in period.

The cross-section of a ring is an important part of its design. Rings having a rectangular cross-section are called "flat" rings. The groove for this type of ring has parallel walls. Another type of ring has a wedge-shaped cross-section. (See Figure 2-3.) This type of ring is called a "keystone" ring and its groove has nonparallel walls. The shape of the ring and its groove are designed to force the ring outward against the cylinder wall during the combustion stroke for better sealing. Keystone rings should not be installed upside down. Flat rings sometimes also have a "top" and "bottom" and should always be installed carefully following the manufacturer's instructions.

A third type of ring is the "Dykes" pattern ring. This ring is usually used alone on a single-ring piston. It is placed at the upper edge of the piston, so that one side of the "L" shape protrudes above the edge slightly. The ring is forced against the cylinder wall during the upstroke by the drag of the cylinder wall twisting the ring outward. During the combustion stroke the gas pressure on the inside of the upper leg of the "L" forces it out against the cylinder wall for a good seal.

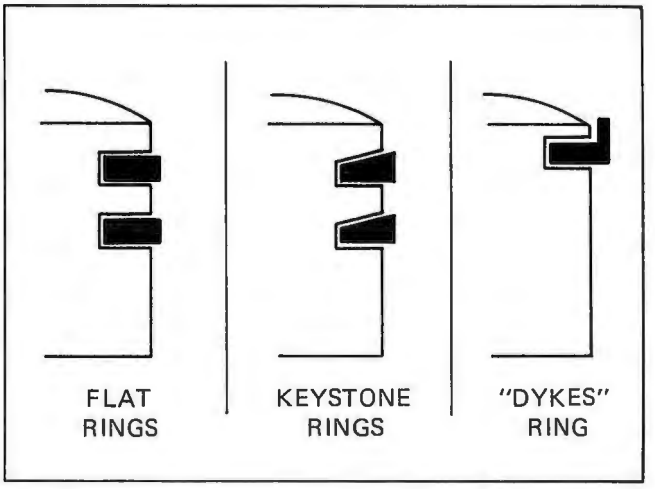

Figure 2-3

The compression ratio may be measured in two different ways. The entire cylinder displacement from BDC to TDC may be used, or just the displacement above the exhaust port. Kawasaki two-stroke engines are generally rated by the second method. As an example, imagine the engine in Figure 2-4 with a 60 mm stroke. Its displacement can be figured as shown.

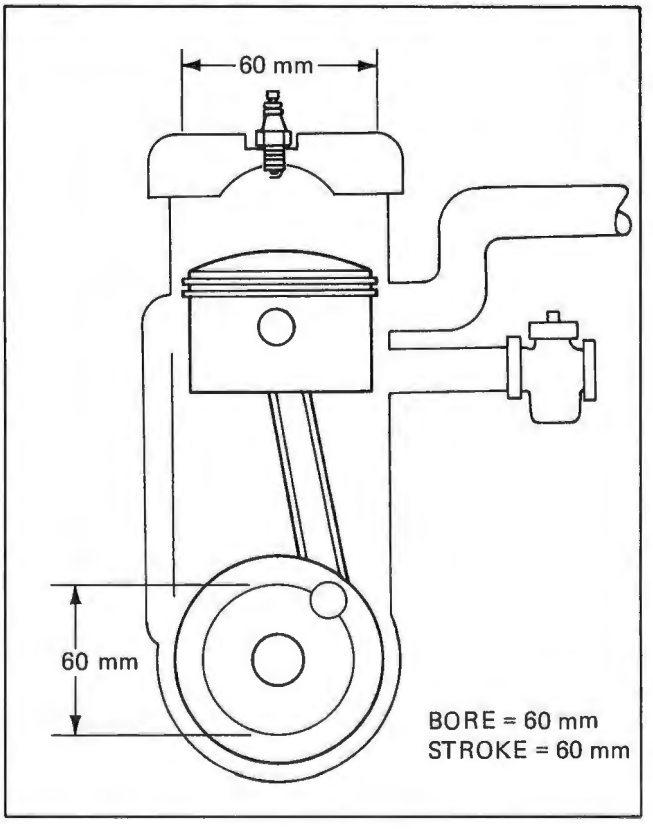

Figure 2-4

$V = \pi r^2 h$
WHERE:
V = displacement volume
r = 1/2 bore - 30 mm or 3 cm
h = stroke - 60 mm or 6 cm
π = 3.1416

V = (3.1416) (9) (6)
V = 169.6 cc or approximately 170 cc

If the engine has a total combustion chamber volume of 20 cc at TDC, then the compression ratio can be figured.

$$R = \frac{V_1 + V_2}{V_2}$$

WHERE:
R = compression ratio
V = displacement volume - 170 cc
V = volume at TDC - 20 cc

$$R = \frac{170 + 20}{20}$$

R = 9.5

This is called the "theoretical" compression ratio. However, if we measure the total volume of the cylinder at the closing of the exhaust port instead of at BDC, the compression ratio calculations might look like these.

$V = \pi r^2 h$
WHERE:
V = displacement volume above exhaust port
r = 1/2 bore - 30 mm or 3 cm
h = distance from top of cylinder to top of exhaust port - 40 mm or 4 cm
π = 3.1416

V = (3.1416) $(3)^2$ (4)
V = 113.1 cc or about 113 cc

$$R = \frac{V_1 + V_2}{V_2}$$

$$R = \frac{113 + 20}{20}$$

R = 6.7

This is usually called the "actual" compression ratio, and is always lower than the theoretical compression ratio.

The compression ratio of an engine is one measure of the efficiency of the engine. The higher the compression ratio, the more efficiently the engine will use its fuel, up to a certain point. An engine with a high compression ratio will put out more horsepower for its size and go further on a gallon of gas than an otherwise identical engine with a lower compression ratio.

The further the mixture is compressed before it is burned, the hotter the combustion will be and the more heat will be produced. Greater heat means more expansion of the combustion products, and that means more horsepower for the amount of fuel used and the engine size.

Combustion

Combustion is started by a spark across the electrodes of a spark plug in the combustion chamber. The spark plug receives a timed surge of high-voltage electricity to ignite the mixture at the right instant. If the ignition comes too soon the engine will try to run backward; too late and part of the power stroke will be lost. The ignition is timed to ignite the mixture at 18° before top dead center (at 6500 revolutions per minute and up). The reason for this lead is to start the mixture burning in time so that peak cylinder pressures will occur just after TDC at high speeds.

When the spark plug fires, it ignites the mixture that is between its electrodes. That burning mixture ignites the mixture around it, and a "flame front" travels across the combustion chamber. The flame front moves across the combustion chamber, burning the mixture as it goes.

Normal combustion is a single flame front traveling across the combustion chamber at just the right speed. There are several types of abnormal combustions and all are undesirable. The most common is detonation. Detonation sounds like a hard, metallic, hammering from the engine. The flame front travels almost instantaneously through the mixture resulting in an explosion rather than an even burning of the mixture. Detonation is related to the octane of the gasoline used.

The "octane" of a gasoline is a number which defines that gasoline's burning speed under a standard set of laboratory conditions. The higher the octane, the more resistant the gasoline is to detonation. Octane ratings are assigned according to a laboratory procedure which compares a fuel's ability to resist detonation to that of a mixture of two petroleum distillate fuels. Oil companies produce gasoline to meet octane requirements by adding tetra-ethyl of lead or certain high-octane petroleum distillates. The "lead" in the gasoline makes it burn more slowly, thus avoiding detonation.

When the mixture burns, a chemical reaction takes place. The molecules of fuel combine with oxygen molecules of the air to produce carbon-monoxide, carbon-dioxide, water, traces of other various compounds, and heat. Heat is absorbed by the engine and combustion products. Heat absorbed by the engine is wasted, but heat that goes into the combustion products increases their pressure, forcing them to expand. This expansion is what produces the actual power in the engine.

The shape of the engine's combustion chamber is a factor in its ability to resist detonation. A smooth chamber with few projections and irregularities is more resistant to detonation. Chambers that induce mixture turbulence are more highly detonation resistant; and chambers with less surface area per unit of volume detonate less than others.

Smoothly surfaced combustion chambers are easily designed. Mixture turbulence can be induced by having a squish area: that is a part of the combustion chamber roof that comes very close to the top of the piston (at TDC), causing the mixture to squirt out from between the piston and the chamber roof as the piston nears TDC. The shape with the lowest surface area per unit of volume is the sphere. An ideal combustion chamber would be a smoothly finished, almost spherical chamber, with a squish area around the edge. This design allows a smooth scavenging flow across the chamber, especially when scavenging flow is lowest.

Compression ratio is important to combustion. A high compression ratio requires a high octane fuel to avoid detonation. A low compression engine can use a lower octane gasoline.

The compression pressure produced by an engine is a more accurate measure of its resistance to detonation than its compression ratio. Compression pressure is the pressure in the combustion chamber, before ignition, produced by the rising piston.

Another type of abnormal combustion is preignition. If the combustion chamber becomes very hot, or a fleck of carbon on the chamber surface or on the head of the piston heats up, the mixture may be ignited before the plug fires. This starts a flame front traveling across the chamber. When the plug fires, its flame front meets the preignition flame front with a small, sharp sound. The preignition creates advanced timing, and the engine will soon overheat. Detonation and preignition can lead to serious engine damage.

Another consideration in combustion chamber design is spark plug placement. The spark plug should be placed near the center of the chamber so the flame front will have the shortest distance to travel to reach all points of the chamber. If the plug is on one edge of the chamber, the flame front has to travel all the way across. From the center, the flame front only has to travel half as far.

Part of the combustion chamber shape is determined by the top of the piston. It becomes the bottom of the chamber at TDC. The top of the piston is generally shaped in a gentle arc to strengthen its center. Some pistons have a raised center to take up space in the combustion chamber and raise the compression ratio.

As the piston is forced downward, the angularity of the connecting rod increases. The crankpin moves around its circle, away from the centerline of the cylinder and then back again. This results in the piston's being thrust against one side of the cylinder wall during combustion, and the other side during compression. The piston pin bore is slightly off-set, in the direction opposite the direction of crankpin travel near TDC. This lessens the impact of the piston's sideways motion against the cylinder wall. The piston reaches TDC slightly before the crankpin does, and piston "slap" at the instant of combustion is minimized. (See Figure 2-5.)

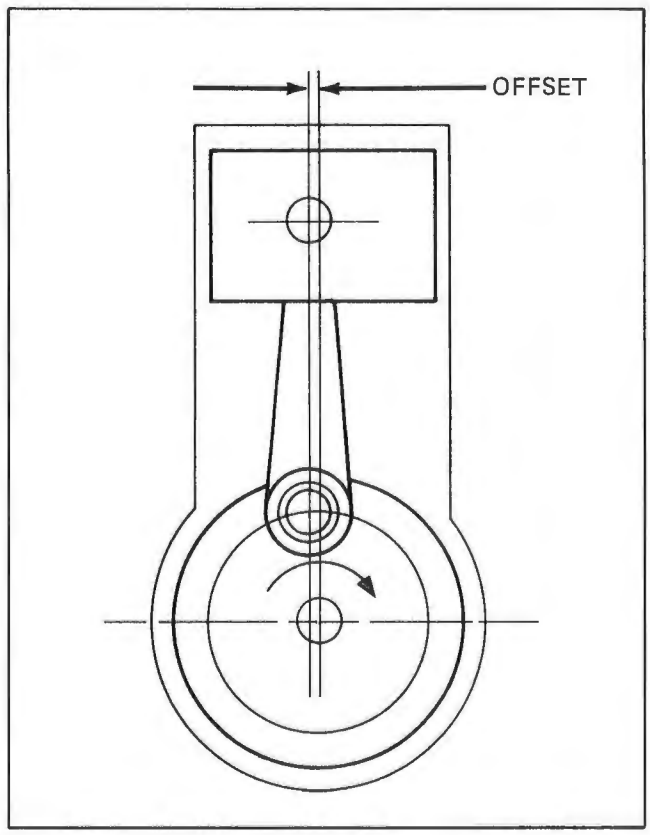

Figure 2-5

The piston cannot be made in a perfectly cylindrical shape or the piston would fit the cylinder only when the engine was cold, and not fit well when the engine was hot. A piston does not expand evenly as it heats up. Near the ring grooves and through the head, the piston walls are thicker for extra strength; the skirt is thin to save weight. (See Figure 2-6.) The upper part of the piston will expand more than the skirt, and must be smaller. The wall thickness near the piston pin bores is greater to handle the stresses of the reciprocating motion of the piston. The piston will expand more across the piston pin bores and must be made with an elliptical shape. As the piston heats up, it expands into a cylindrical shape and fits the cylinder.

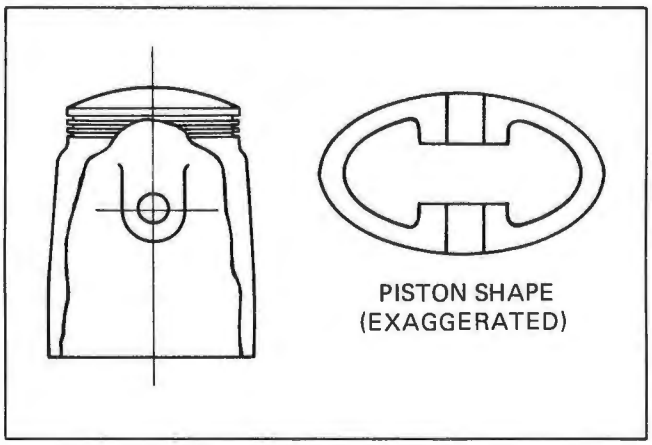

Figure 2-6

The rather odd shape of the piston when cold makes it important to know where to measure when checking piston to cylinder clearances. Usually the piston is measured with a micrometer across the skirt at 90° to the piston pin bores, about 3/16 in. (5 mm) up from the bottom edge. The other half of piston clearance is the cylinder diameter. This is measured with a dial-bore gauge (if available) at four different positions, and in two directions at each position. The cylinder is measured not only for size, but for roundness and taper.

Exhaust

The design of the exhaust system and timing has a major effect on the characteristics of the engine. The speed range of the engine increases with the height of the exhaust port. Proportionately, the useful power range of the engine decreases. The exhaust port opens and closes at about 80° to 90° BBDC. The height of the port determines its timing. The higher the exhaust port, the wider the exhaust angle.

The last bit of pressure in the cylinder is released into the exhaust system with the opening of the exhaust port. This forces the gases to move in the right direction. After bottom dead center, the rising piston forces the rest of the burned gases out through the exhaust port.

The exhaust system consists of a passage from the exhaust port through the cylinder head, an exhaust manifold, and a muffler. It removes the exhaust gases quickly and easily while reducing excessive noise.

Engine Design

Theory, function, and design of the upper portion of the engine are important, but not complete until the lower end (crankcase) functions are understood.

The crankcase contains the crankshaft, and supports the main bearings. Snowmobile engines use ball bearings for the main bearings.

These ball bearings are very strong and consist of two hardened steel races separated by a caged set of steel balls. The crankshaft is fitted to the inner race, and the crankcase carries the outer race. As the crank turns, the inner race rolls on the balls which roll on the outer race. The cage keeps the balls from rubbing against each other. (See Figure 2-7.)

The crankcase is designed to totally enclose the crankshaft. In order to install and remove the crankshaft, the crankcase is split horizontally.

The crankcase must be airtight and oiltight. The mating surfaces of the crankcase halves must match perfectly. A sealing compound is used, rather than a gasket, to insure airtightness on Kawasaki two-stroke engines. The crankshaft oil seals and cylinder base baskets have to be airtight.

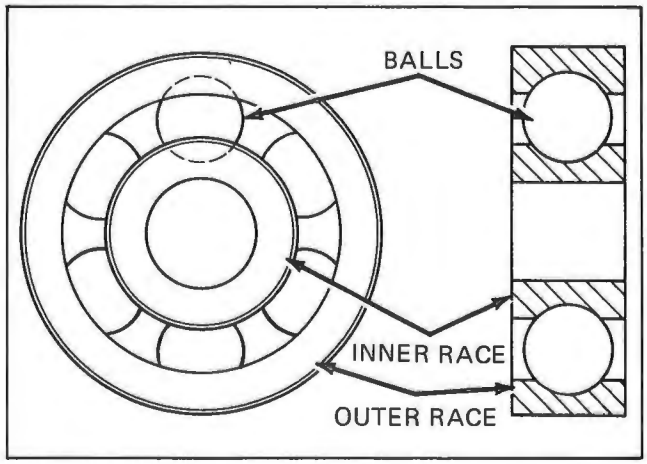

Figure 2-7

To achieve good crankcase compression, the crankwheels are designed to fill the crankcase as completely as possible. Between the crankwheels is the connecting rod. There is very little wasted space inside the crankcase.

The crankshaft is pressed together from separate parts. A caged needle bearing is used on the crankpin. The crankpin rolls on the needles, and the needles roll on the inside of the large end of the connecting rod. The connecting rod is located sideways, and held by two thrust washers, one on each side of the big end.

The crankshaft can twist or loosen and become misaligned because it consists of separate pieces pressed together. The crankwheels must be perfectly aligned on the crankpin. (See Figure 2-8.) There is a specified side and radial clearance for the big end bearing of the connecting rod. (See Figure 2-9.)

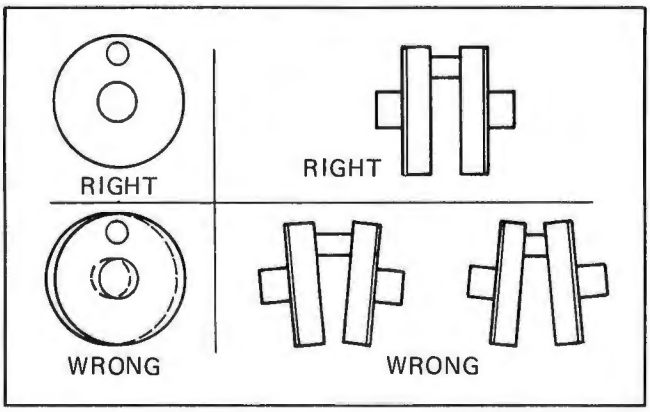

Figure 2-8

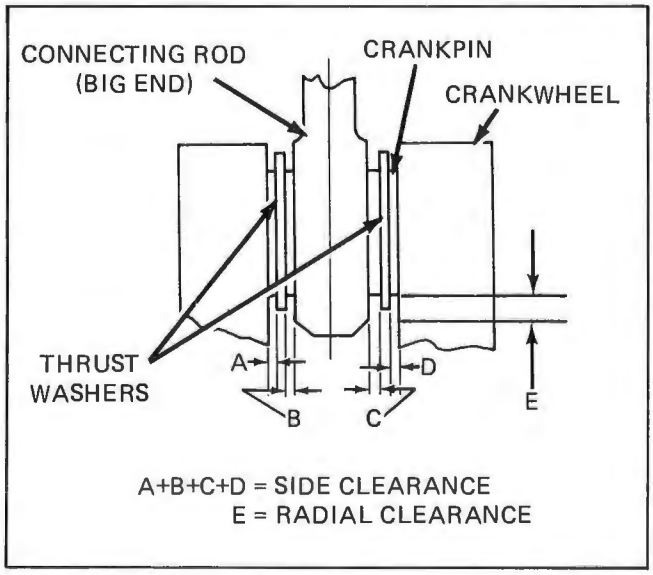

Figure 2-9

Lubrication

The lubricating oil for most snowmobile engines is carried entirely in the fuel. Petroil is a mixture of gasoline and oil used as a fuel in these two-stroke engines. The term "petroil" was probably termed by the British from the two words "petrol" for gasoline, and "oil."

Depending upon the manufacturer's recommendations, the ratio of gasoline to oil in a petroil mix can vary from 16 to 1, all the way to 40 to 1 (and some may be even higher).

Cooling

All snowmobile engines need to be cooled. More heat is produced by combustion than the combustion products can absorb in horsepower. This extra heat is absorbed by the piston, cylinder walls, and cylinder head.

The piston is cooled by the new fuel/air mixture coming from the bottom, by the new mixture flowing across the top during the scavenging, and by contact with the cylinder walls. The piston is usually hotter than the cylinder walls or the cylinder head, and is the first component damaged by overheating.

The most common form of engine damage caused by overheating is piston seizure. This is caused by the overheated piston expanding and pressing against the cylinder wall. Friction adds heat to the piston until it begins to melt. Pieces are rubbed off onto the cylinder wall and welded there by extreme heat. A piston will seize first on the exhaust side because that side runs hotter. Incorrect piston clearances and uneven cylinder expansion can also cause seizure. A mild seizure feels like a sudden loss of power. If the damage is slight, the piston can be cleaned and the cylinder bore may not be damaged. A more severe seizure may lock the engine solid. The damage from a severe seizure requires fitting a new piston and replacing the cylinder. A severe seizure can damage the connecting rod and crankshaft. These components should always be examined for damage.

The cylinder and head may be cooled by air or water. An air cooled engine has fins on the cylinder and head which increase the area exposed to air. The more area exposed, the more heat given up. If the cooling fins or fan intake system become clogged with foreign material, the engine may overheat.

The engine is cooled by the air flowing over it. A fan blows cooling air across the cylinders and heads and draws the heat out of the engine. The

engine will not be cooled as effectively at an idle, and most snowmobile engines will gradually overheat if they are allowed to idle for an extended period of time.

The average snowmobile engine contains a high percentage of lightweight aluminum components. Aluminum conducts heat very quickly. An aluminum cylinder or head will run cooler than an identical iron one. The cylinder walls cannot be bare aluminum because they would be too soft and wear quickly. Aluminum cylinders have a chrome plate lining to make them wear acceptably.

Carburetor Theory of Operation

Introduction

The mixing of fuel and air in the amounts required for efficient combustion is the function of the carburetor.

A common method for referring to carburetors is the bore or venturi size. This method is used in snowmobiles. The measurement is the diameter of the smallest part of the venturi. (See Figure 2-10.)

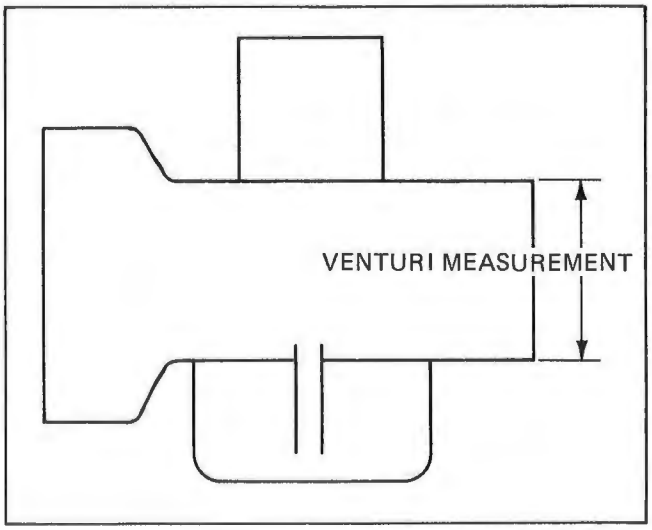

Figure 2-10

The carburetor is the rider's primary control over the movement of his machine. The carburetor chooses the engine speed that will propel the machine at the desired rate. With a squeeze of the control the rider can choose a speed anywhere from a virtual crawl to flat out. The rider expects that the engine will respond instantly, anywhere within its operating range.

The carburetor receives the message from the rider in the form of a pull on a cable. This lifts a slide which uncovers the air passage to the engine. This slide, aided by numerous ports, passages, needles, and jets, regulates the flow of fuel and air into the engine. When the slide is lifted, a greater quantity of fuel/air mixture flows under the slide into the engine, causing it to produce more power. When the slide is lowered, less fuel/air mixture is admitted to the engine, causing it to reduce speed and power.

The carburetor controls the amount of fuel/air mixture which reaches the engine. (See Figure 2-11.)

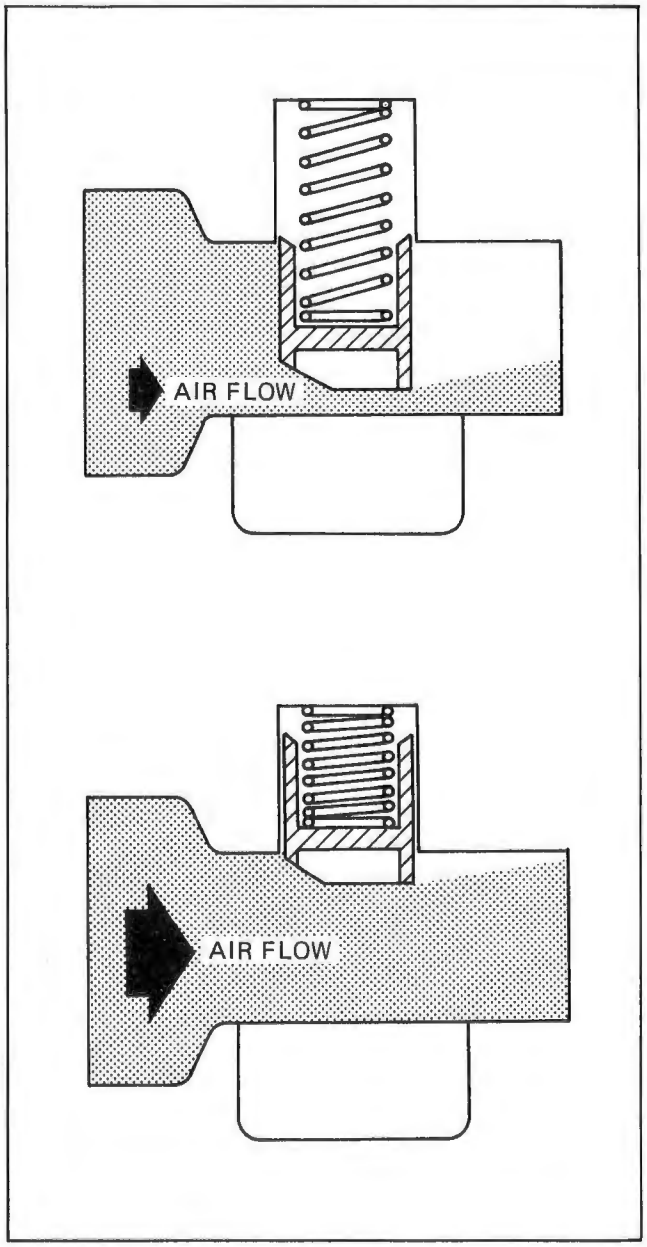

Figure 2-11

The fuel/air ratio must be adjusted to meet the changing needs of the engine for particular conditions of load and speed. The ideal burning ratio of fuel to air is about 1:15 or one gram of fuel to each 15 grams of air. This is an "ideal" or "theoretical" mixing ratio, and is only achieved for a fraction of the time that the engine is running. Due to incomplete vaporization of fuel at low speeds or additional fuel required at high speeds, the actual operational fuel/air ratio is usually richer.

Within the acceptable fuel/air ratios that can be burned in the engine, a balance between power and economy must be reached. The amount of air entering the engine for combustion is the limiting factor for maximum performance. To take advantage of the limited amount of air available for combustion, it is necessary to surround each air molecule with enough fuel molecules to insure that all of the air is utilized. Maximum power is obtained by gaining maximum burning efficiency of the available air. Maximum economy is gained by surrounding each molecule of fuel with several molecules of air to insure maximum use from a given quantity of fuel. Maximum economy is maximum burning efficiency of the available fuel.

Somewhere between maximum power and maximum economy is where most snowmobiles are usually ridden. The range of fuel/air ratios that the engine receives at one time or another ranges from an extremely rich 1:6 to a very lean 1:17. (See Figure 2-12.) At very slow engine speeds the flow of air through the carburetor is slow and the fuel is broken up into small droplets. If the engine is cold, these droplets of fuel will not vaporize as they would in a warm engine. It is necessary to provide a very rich mixture to insure that some of the fuel will be burned.

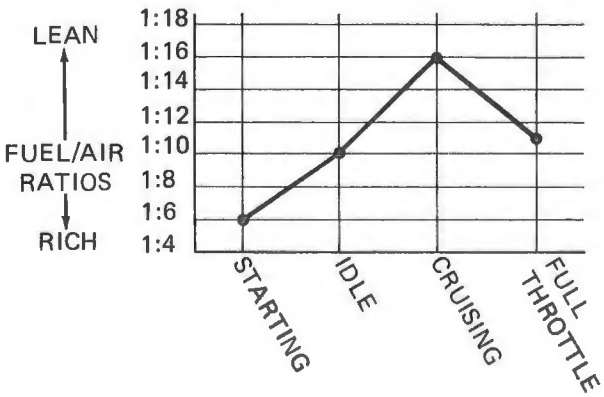

Figure 2-12

When warmed up, the engine speed at idle is low, and air flow through the carburetor is so low that incomplete atomization of the fuel occurs. The mixture at idle is rich, about 1:10. Under hard acceleration, when maximum power is being developed, the mixture ratio might be around 1:12. The actual amounts of fuel and air are much greater for high power operation. This is why fuel economy drops rapidly when a snowmobile is ridden at full throttle much of the time. At cruising speeds, air flow through the carburetor is substantial, but the fuel is metered sparingly. This results in a slightly lean mixture.

The carburetor must have the ability to meter the fuel and air for extremes of power or economy and somewhere in between. The carburetor responds to the rider's needs by supplying fuel and air to the engine in the exact quantities demanded by speed and load.

Carburetor operation is based on the basic principles of fluid dynamics. These principles state that when a fluid (such as air) is flowing through a tube and encounters an area of smaller diameter (known as a venturi or constriction), the fluid will undergo an increase in velocity and a decrease in pressure as it passes through the venturi. (See Figure 2-13.)

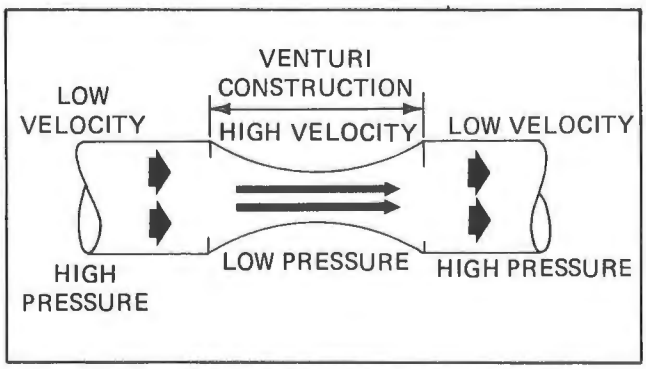

Figure 2-13

Air is drawn in from the air silencer into the engine. This air flows through the carburetor, both the large entry section and the smaller venturi section, with no loss. If 1000 cc of air flow past a point in the entry of the carburetor in one second, then the same amount of air (1000 cc) must flow past a point in the venturi in the same amount of time (one second). If only 900 cc could flow past the point in the venturi in one second, there would soon be a severe pressure build-up in front of the carburetor. To achieve the same flow volume, the air must flow faster through the venturi. Exactly how much faster depends on how much smaller the constriction or venturi is than the rest of the tube. The smaller the venturi, the faster the air flow.

Figure 2-14 shows a carburetor with a maximum entry diameter of 41 mm and a venturi of 26 mm The venturi dimension is the "size" of the carburetor.

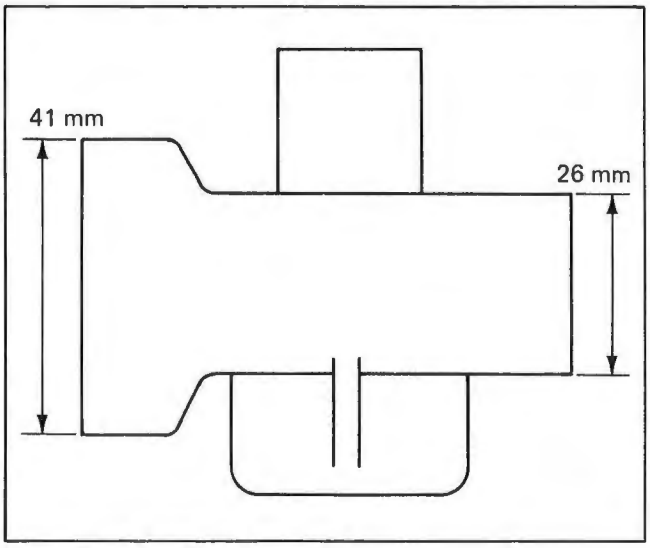

Figure 2-14

The velocity of the air (or a single "particle" in the air) is inversely proportional to the cross-sectional area of the tube. To find the cross-sectional area of the entry and the venturi use the following equations:

$A_1 = \pi r_1^2$

$A_2 = \pi r_2^2$

Where:

A_1 is the area of the entry

A_1 is the area of the venturi

r_1 is the radius (1/2 of the diameter) of the entry

r_2 is the radius of the venturi

π is a constant, 3.14

express A_1 and A_2 in a ratio to find how much larger the entry is than the venturi.

The cross-sectional area of the entry is:

$A_1 = 3.14 \times 20.5^2$

$A_1 = 3.14 \times 420.25$

$A_1 = 1319.585$ mm

The cross-sectional area of the venturi is:

$A_2 = 3.14 \times 13^2$

$A_2 = 3.14 \times 169$

$A_2 = 520.66$ mm

The ratio of A_1 to A_2 is:

$$\frac{A_1}{A_2} = \frac{1319.585}{520.66} = \frac{2.53}{1} \quad \text{or } 2.53:1.$$

The area of the venturi is about 2-1/2 times less than the area of the entry. Since the velocity is inversely proportional to the area, the velocity through the venturi is about 2-1/2 times greater than through the entry tube.

Occurring along with the velocity increase is a drop in air pressure in the venturi region. This reduced pressure allows the air flowing through the carburetor to accelerate through the venturi section. Under average conditions, the pressure in the venturi will be approximately 60% of the pressure in the entry (which is approximately the same as atmospheric pressure).

Metering System

The carburetor consists of a number of separate systems to supply fuel and air as required. Fuel supply is handled by a fuel pump and float bowl. The main system, pilot system, and starter system mix fuel with air as it is needed by the engine.

Float Bowl

The float bowl (or float chamber) is the source of fuel for the other systems which meter the fuel; the main and pilot systems; and the starter system. The float chamber is attached to the bottom of the carburetor. The upper portion of the chamber cavity is vented to the atmosphere, so air pressure inside the bowl is the same as pressure outside the bowl.

Fuel level in the float bowl is controlled by floats and a needle valve.The lower end of the needle valve rides on the float arm, and the upper end seals against the needle valve seat. When the level

of fuel in the bowl drops, the floats drop slightly, and the needle valve moves down away from the seal. This allows fuel pumped from the tank by the fuel pump to flow into the bowl. As fuel enters the bowl, the floats rise, pushing the needle valve into contact with the valve seat, shutting off the flow of fuel. (See Figure 2-15.)

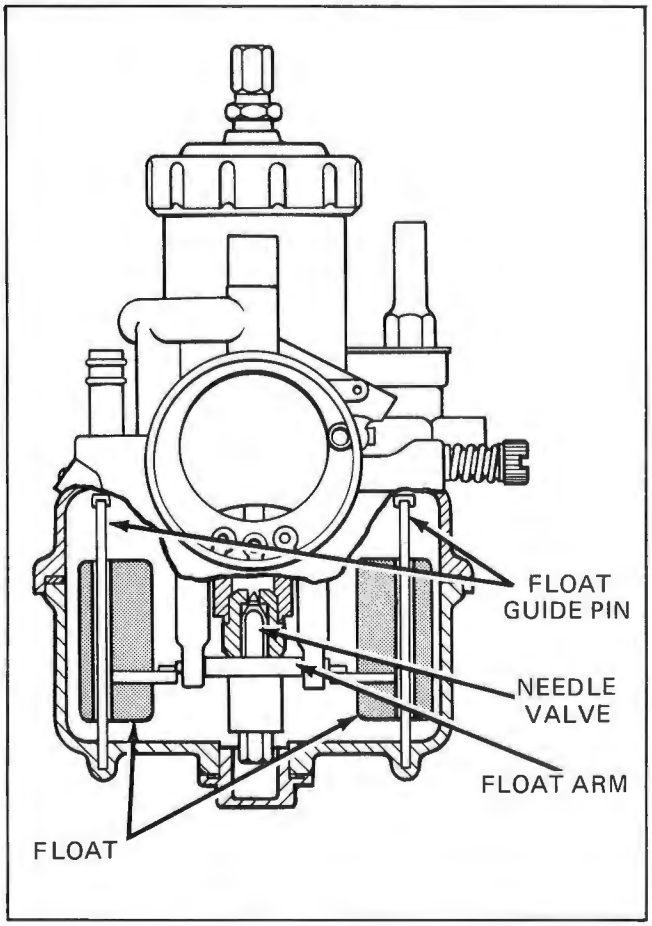

Figure 2-15

The fuel level affects how rich or lean the engine will run throughout its entire range. The reason for this is the drop in pressure that occurs in the venturi. The float bowl is vented to the atmosphere, so there is a pressure of 14.7 psi (1.03 kg-cm^2) pushing down on the surface of the fuel in the float bowl. When the engine is stopped, this pressure is on the surface of all the fuel in the float bowl, including the fuel inside the "feed tubes" which lead into the venturi. When the engine is running, the pressure in the venturi is less, and the pressure in the feed tubes is also less. The atmospheric pressure acting on the surface of the fuel in the bowl is much greater than the pressure acting on the fuel in the feed tube. Therefore, the level of fuel in the feed tube rises, pushing the fuel in the feed tube up into the venturi where it is released into the air stream as tiny droplets. (See Figure 2-16.)

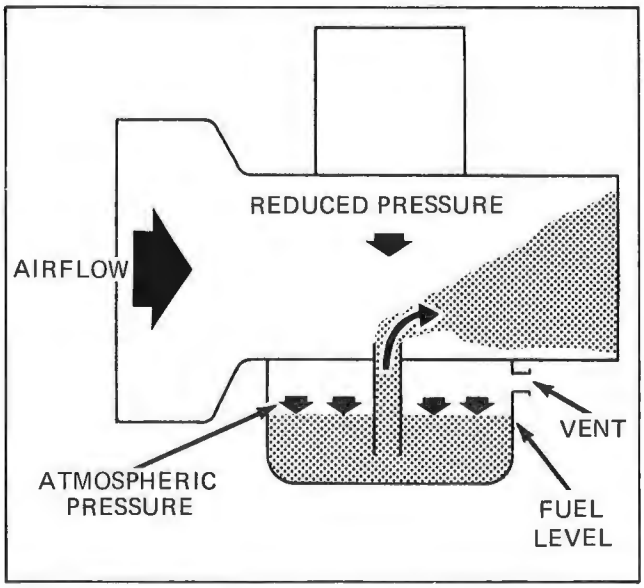

Figure 2-16

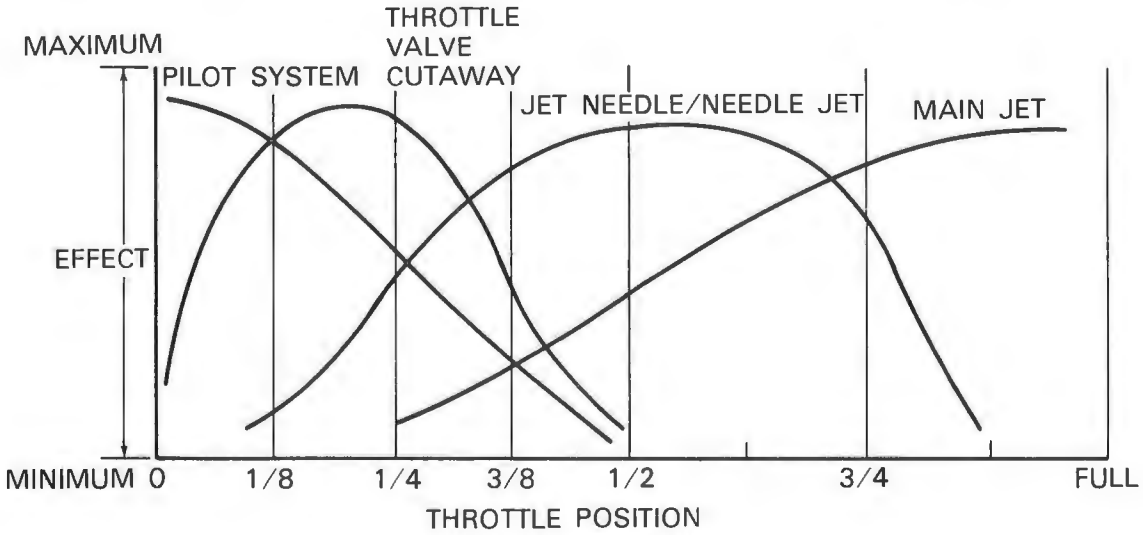

Figure 2-17

The float level is important at low speeds. If too low, the decreased pressure in the venturi would not be able to pull enough fuel up out of the bowl and into the air stream. This would cause hard starting and lean mixture ratios. If the fuel level is too high, too much fuel is pulled into the venturi and the engine would run too rich. The float level is adjusted by bending the tab. Bending the tab towards the needle valve lowers the fuel level, and bending it away from the valve raises the level. Always set the fuel level at the correct level.

Metering the fuel and air in the proper amounts is performed by a number of separate systems. Each system has a range of throttle positions in which it is effective, but the division between where one system takes up and another leaves off is gradual. This overlap insures the transition from one system to another will be smooth. The metering components are the throttle slide, main fuel system, pilot system and the starter system. Figure 2-17 illustrates the overlap between the components.

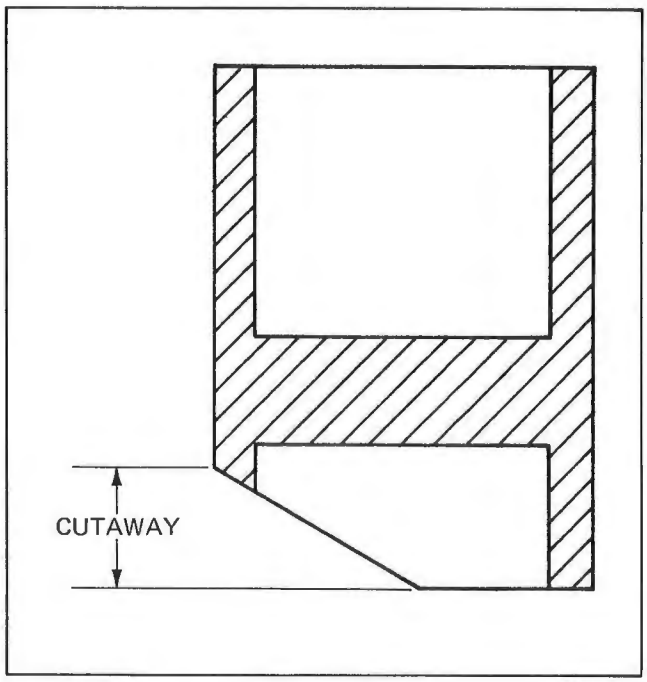

Figure 2-18

Throttle Slide

The amount of air entering the carburetor is determined by the throttle slide. The throttle slide rides in a closely fitting bore directly above the venturi in the carburetor body. The movement of the slide is controlled by a cable and spring. In the "fully closed" position, little or no space remains under the slide for the air to flow through the venturi. As the slide is raised higher, more air will flow through the venturi and into the engine. When the slide is in a lower position, it blocks part of the venturi, and the area under the slide becomes a venturi in a venturi. The size of the actual venturi or air passage changes with the position of the slide. This is known as a variable venturi type. It is the most common type found on snowmobiles and is used on all Kawasakis.

At lower throttle positions, the cutaway of the throttle slide affects mixture ratios. The effect of the cutaway is felt most from about 1/8 to 1/3 throttle. The higher the cutaway, the leaner the mixture will be at a constant throttle position. The higher cutaway offers less resistance to the incoming air. The fuel supply remains relatively constant at any constant throttle position, and the additional air results in a leaner mixture. The lower the cutaway, the greater air flow resistance, and a richer mixture. The slide cutaway provides for adjustment of the fuel/air ratio as the transition is made from idle to the full venturi action of the carburetor. (See Figure 2-18.)

Main System

Two separate systems meter the fuel and mix it with the air: The main system for normal running, and the pilot system for low speed running.

The largest portion of the metering is performed by the main system. The components are: The throttle slide, jet needle, needle jet, and the main jet. As soon as there is enough air flow through the venturi to draw fuel up into the main jet/needle jet assembly, the main system takes effect. The main system components meter fuel from 1/8 throttle to full throttle. The throttle slide is part of the main system only in that it carries the jet needle.

The jet needle rides in the throttle slide and moves up and down with the slide. The needle itself is tapered at its lower end and has grooves at its top end. Figure 2-19 shows a typical double taper jet needle. The needle is tapered in two stages. This double taper needle is used in larger two-stroke engines. The markings on a needle indicate the length of the needle and the taper of both sections. The first number is the overall length of the needle, rounded off to the lowest 10 mm. Thus a 5 indicates that the needle is at least 50 mm but less than 60 mm in length. The letters on the needle indicate the taper of each section. The first letter stands for the taper of the top section (closest to the grooves), and the second letter stands for the bottom taper. The taper angles are graduated in 15′ (15 minute) increments with a taper of 15′ indicated by the letter A, a taper of 30′ indicated by

the letter B and so on. A needle marked 6DH3 would be between 60 and 70 mm with a top taper of 1° and a bottom taper of 2°. Refer to chart showing the taper angles of the double taper needles used by Kawasaki. Needles are sometimes referred to with another number which is not actually stamped on the needle. This number indicates the groove in which the clip belongs. A 6DH3-3 would refer to the needle described, as well as telling that the clip should be in the third groove from the top.

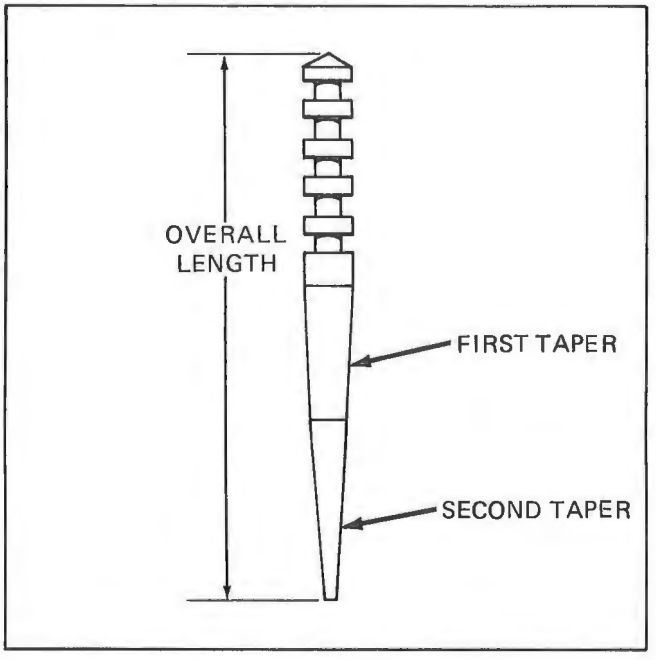

Figure 2-19

NEEDLE TAPER ANGLES

A 0° 15′	I 2° 15′
B 0° 30′	J 2° 30′
C 0° 45′	K 2° 45′
D 1° 0′	L 3° 0′
E 1° 15′	M 3° 15′
F 1° 30′	N 3° 30′
G 1° 45′	O 3° 45′
H 2° 0′	P 4° 0′

The top of the needle is fastened to the throttle slide, and the tapered end extends into the needle jet. The needle jet fits in the carburetor body in the center of the venturi. The lower end of the needle jet is fed fuel from the float chamber by the main jet. The inside diameter of the jet is greater than the non-tapered section of the needle. The inside diameter of the needle jet used is 2.680 mm and the outside diameter of the needle is 2.512 mm. Subtracting the diameter of the needle from the diameter of the jet gives the amount of clearance between them.

$$\begin{array}{r} 2.680 \text{ mm} \\ -2.512 \text{ mm} \\ \hline 0.168 \text{ mm} \end{array}$$

The clearance is 0.168 mm. As shown in Figure 2-20, the needle blocks the jet when the throttle slide is closed. When the slide is lifted, the needle rises out of the jet until the tapered section arrives at the upper end of the jet. The effect of the taper is to increase the clearance between the jet and the needle as the needle is lifted.

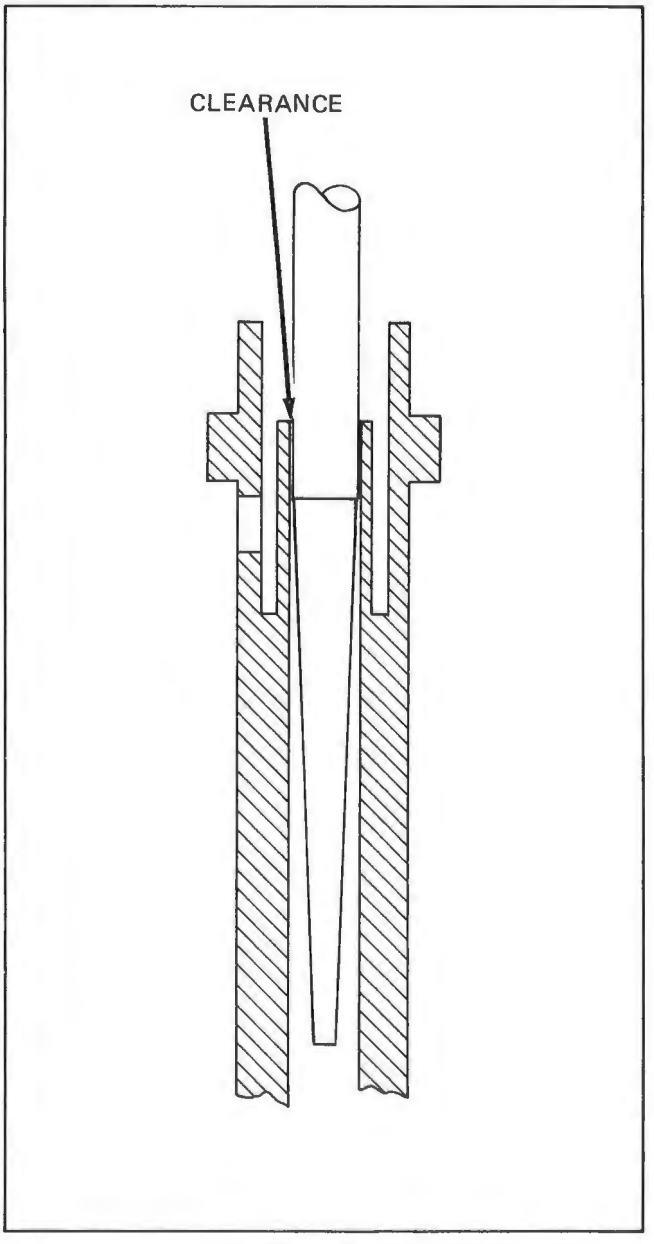

Figure 2-20

With the throttle slide raised, fuel from the float bowl is drawn by reduced pressure, up into the jet and through the clearance area between the jet and the needle. The double taper of the needle serves to accelerate the flow rate of the fuel so the amount of fuel can keep up with increasing amount of air in higher throttle positions.

Changing the position of the needle changes the amount of available fuel. The needle is moved by moving the clip up or down in the grooves on the needle. Moving the clip towards the top of the needle delays the fuel flow increase, leaning out the mixture. This is known as lowering the needle (because if the clip goes up, the needle sits lower). Raising the needle (lowering the clip) richens the mixture by advancing the fuel flow increase. (See Figure 2-21.)

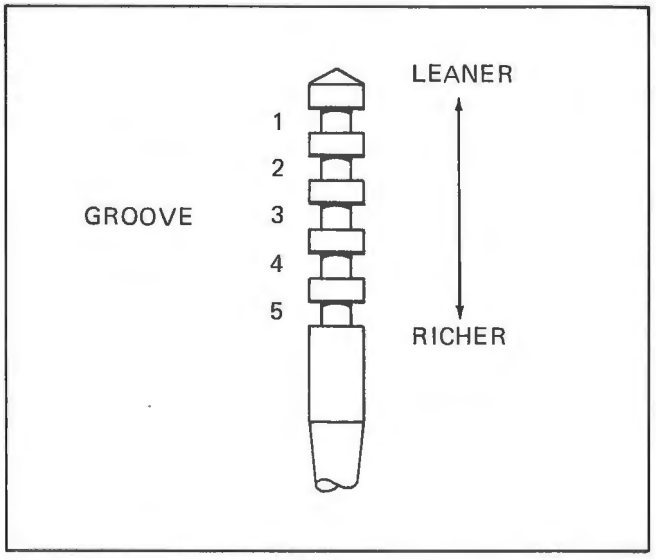

Figure 2-21

Around 3/4 throttle, the clearance between the needle and the jet becomes greater than the cross-sectional area of the main jet. At this point, the fuel flow is determined by the size of the main jet.

The needle jet pre-atomizes the fuel before it enters the venturi for final atomization into the engine. Fuel enters the venturi in a spray of tiny droplets rather than a flow or dribble. The atomized fuel spray is vaporized by the engine heat. The atomization of the fuel in the needle jet and venturi improves the burning efficiency of the engine.

Atomization of the fuel in a snowmobile carburetor is accomplished by use of a "primary type" needle jet. The primary type tends to flow more fuel, allowing richer mixtures, and is used mostly on larger two-stroke engines. (See Figure 2-22.)

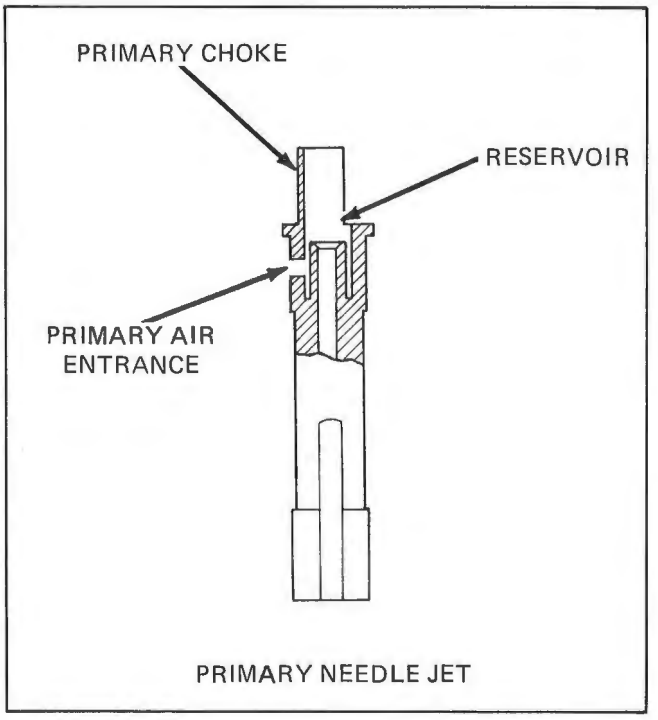

Figure 2-22

The primary type needle jet has a "reservoir" which surrounds the point at which the fuel exits past the needle. This reservoir is connected by passages in the carburetor body to a very small air jet in the front (away from the engine) end of the carburetor. Air flows in this jet, through the passages and into the reservoir where it mixes with the fuel and is drawn into the venturi. The entrance to this passage is out at a point of near atmospheric pressure and the exit is subject to venturi depression. Air flow is aided by pressure differential. The size of the jet is very small, so the air arrives at the reservoir with high velocity. At the reservoir, air helps break up the drops of fuel as they leave the center metering portion of the needle jet. (See Figure 2-23.)

Surrounding two-thirds of the reservoir is a lip which extends up into the venturi in front of the needle. This lip generates turbulence which creates a greater vacuum behind the lip where the reservoir and needle are located. At high RPM, this extra vacuum effect helps pull more fuel up from the float bowl. The lip on the needle jet is known as a primary choke. The height of the primary choke determines the amount of turbulence, and the amount of extra depression at the venturi exit of the needle jet. A taller primary choke will create more turbulence and suction, leading to a richening of the mixture at higher RPM. Using a taller primary choke allows use of a smaller main jet to achieve approximately the same mixture ratio at full throttle but a decrease in fuel consumption in the medium throttle position.

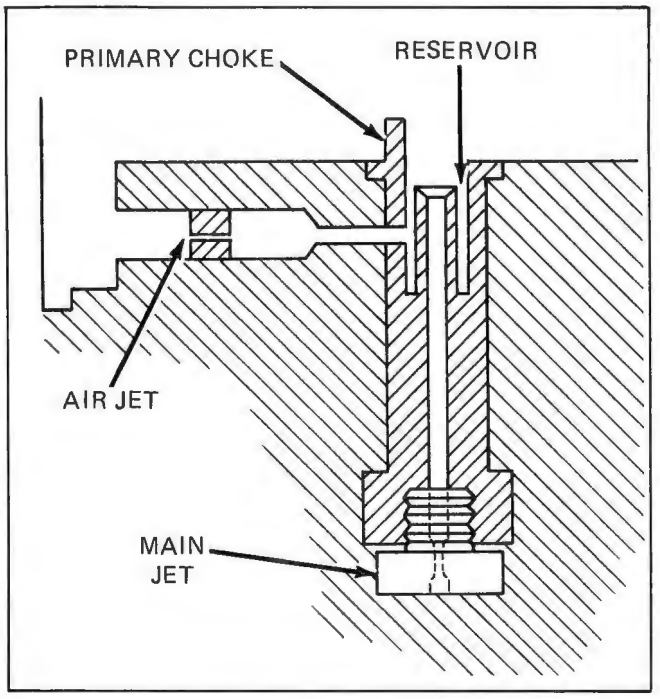

Figure 2-23

The needle jet is identified by its diameter. Figure 2-24 is a chart for identifying the size of needle jets of the primary type.

The last component of the main system is the main jet and the metering screw (not on all carburetors). The main jet is attached inside of the float bowl cover. An O-ring is used to seal the bottom of the needle jet assembly to the float cover to insure that fuel can enter the needle jet only through the main jet. The main jet meters all fuel to the main system.

When the main system begins to meter fuel, the throttle slide cutaway, needle, needle jet, and main jet determine the amount of fuel that should be delivered for the amount of air entering the engine. This working relationship continues until approximately 3/4 throttle. At this point, the cross-sectional area of the clearance between the needle and the needle jet becomes greater than the cross-sectional area of the main jet. When this occurs, there are no restrictions to fuel flow any greater than the restrictions of the main jet; and the size of the main jet determines how much fuel will be available.

Main jet size is indicated by the number stamped on the jet. There are different types of main jets, each with a different numbering system. Figure 2-25 shows each type of jet and Figure 2-26 compares their flow rates in cc per minute to the numbers stamped on the jets.

Use extreme care when changing main jets. Use a replacement of the same type. Matching only the numbers can result in total confusion as to why the engine will not run properly.

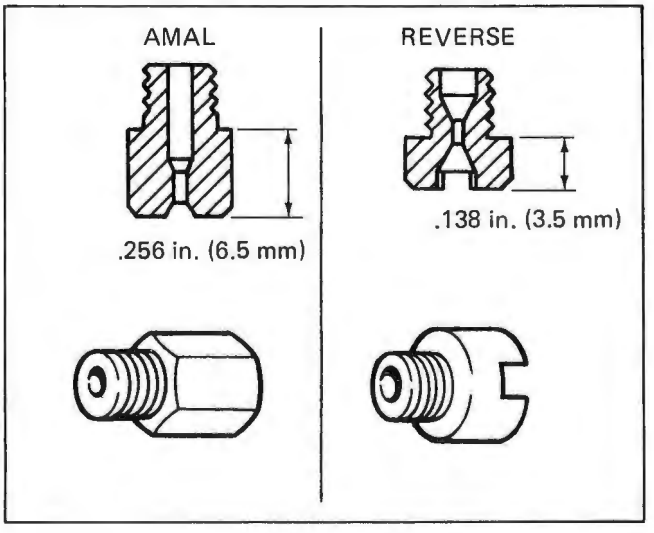

Figure 2-25

NEEDLE JET INSIDE DIAMETERS

	0	1	2	3	4	5	6	7	8	9
N	2.550	2.555	2.560	2.565	2.570	2.575	2.580	2.585	2.590	2.595
O	2.600	2.605	2.610	2.615	2.620	2.625	2.630	2.635	2.640	2.645
P	2.650	2.655	2.660	2.665	2.670	2.675	2.680	2.685	2.690	2.695
Q	2.700	2.705	2.710	2.715	2.720	2.725	2.730	2.735	2.740	2.745

Figure 2-24

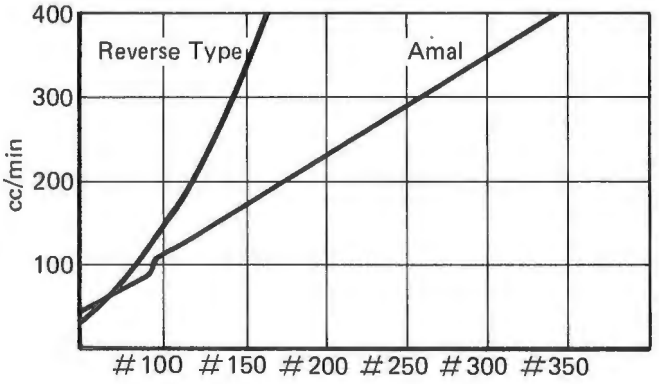

Figure 2-26

Pilot System (See Figure 2-27.)

Fuel and air supply at low speeds and small throttle openings is controlled by the pilot system, or slow system. The pilot system consists of a series of passageways in the carburetor body, a pilot jet to meter fuel, and a pilot air screw to meter air. At low engine speed and small throttle opening the main system can not provide the proper amount of fuel or air.

Fuel is drawn through the pilot jet which protrudes into the float chamber. The pilot jet has a series of holes drilled in its body at the point where the air is introduced from the passageways. These holes allow fuel to be mixed with air before it enters the venturi through the pilot outlet. (See Figure 2-28.)

Air for the pilot system enters from the front of the carburetor and is metered by the pilot air screw. The pilot air screw is tapered to provide a gradual increase in air flow as the screw is backed out. The taper fits in the center of a passageway, and turning the screw all the way in closes the passageway. The normal air screw setting is from 1 to 1-3/4 turns out from a lightly seated position. If the pilot mixture appears too rich, backing the air screw out further will lean the mixture. Turning the air screw in farther will cut down the amount of air supplied, resulting in a richer mixture. Adjustment of pilot mixtures can also be effected by changing pilot jets.

At idle speeds (very low, "closed" throttle position) air from the air passage in the front of the carburetor is supplemented by air from the pilot bypass. At these almost closed throttle settings, air enters from the pilot air passage and the bypass. When the throttle is opened, air flow through the venturi increases, and fuel/air mixture now exits from both the outlet and the bypass, where it mixes with the air flowing through the venturi.

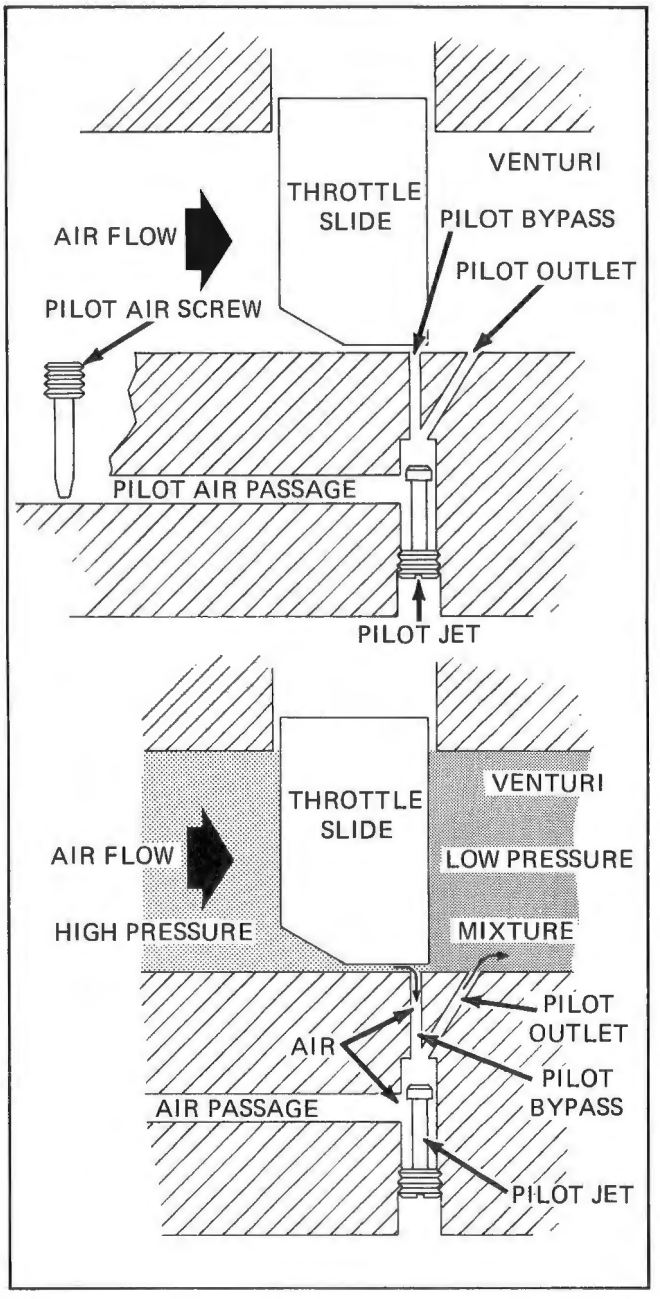

Figure 2-27

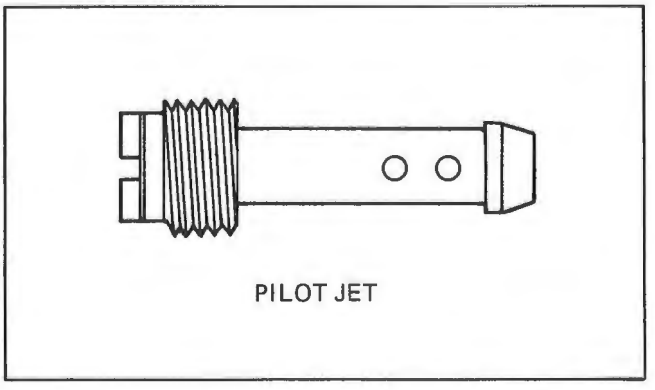

Figure 2-28

Fuel/air mixtures metered by the pilot system are somewhat richer than mid-range, partial throttle mixtures. Low engine speed at low throttle position does not promote good atomization of the fuel entering the engine.

Starter System

Starting a cold engine presents problems of low air flow and poor atomization that require a rich mixture. In a cold engine the engine parts are not hot enough to vaporize the droplets of fuel. To overcome these difficulties requires an even richer mixture than that provided by the pilot system. To provide these richer mixtures, a starter system is added to the carburetor. The starter system consists of a jet to meter the fuel, and a plunger which opens air passages from the front of the carburetor and into the venturi. The plunger is lifted by a cable. Lifting the plunger uncovers the air inlet passage and outlet to the venturi. If the throttle slide is closed, the air that goes to the engine must come through the starter passageways. This creates enough suction to draw fuel from the bowl into the chamber below the plunger. Here it is mixed with air from the front of the carburetor and drawn into the venturi and the engine. Atomization of fuel for starter mixtures is aided by an emulsion tube, a long tube which protrudes into the fuel and through which the fuel from the starter jet is drawn. This tube has holes drilled in it, similar to the pilot jet and air bleed needle jet. These holes allow a small amount of air from the float chamber to be mixed with the fuel before it enters the chamber below the starter plunger. The atomization of the fuel allows it to flow more easily through small passages. (See Figure 2-29.)

Primer System

The primer pump is located in the dash panel above the ignition key switch. This pump is used along with the enrichener (Starting System) for cold starts. It injects a measured amount of fuel into the carburetor venturi at a point just beyond the throttle slide.

For cold starting, pump the primer 4 to 6 strokes. The amount of priming necessary will vary in accordance with temperature and atmospheric conditions. Experience will indicate the correct number of strokes required to start your engine. Overpriming will cause engine flooding resulting in hard starting rather than assisting during cold starting. DO NOT overprime the engine.

Should the engine tend to hesitate or die after starting, additional single strokes of the hand pump will be necessary until the motor has attained sufficient operating temperature.

To operate the primer pump:

1. Pull out on the primer knob. Outward movement of the primer shaft draws fuel from the fuel tank to fill the primer pump cavity.
2. Push in on the primer knob. Inward movement of the primer shaft pumps fuel from the primer to the fitting on the carburator.

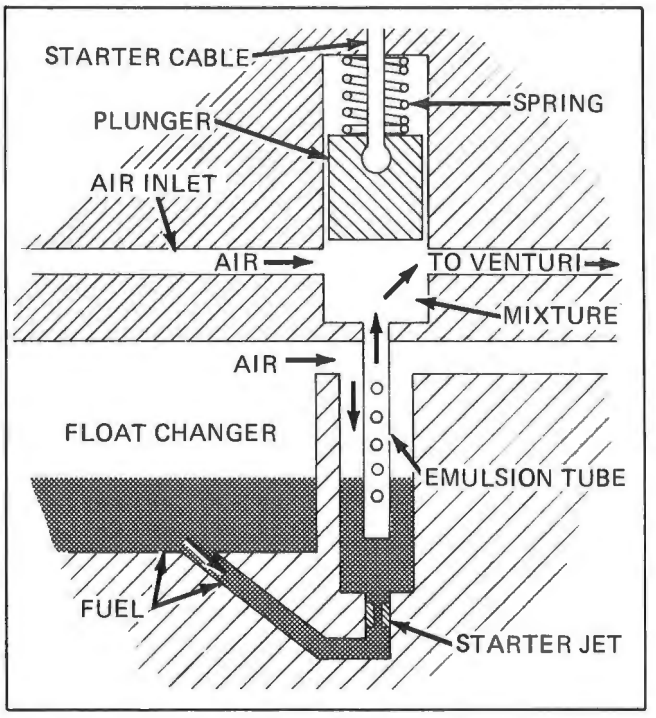

Figure 2-29

NOTE: Be sure that the primer knob is pushed in, and contacts the body of the pump to prevent siphoning of fuel through the pump during engine operation.

Ignition System Theory of Operation

The ignition system consists of the spark plugs, ignition coil, a capacitor discharge ignition (CDI) igniter, exciter coil, and a pulser coil. (See Figure 2-30.)

The CDI magneto assembly consists of a flywheel with four magnets evenly spaced about the circumference and a stator. The stator serves as a mount for three coils. The exciter coil charges the capacitor in the CDI igniter; the pulser coil signals the CDI igniter to fire the spark plugs (both spark plugs fire simultaneously); and the lighting coil supplies current to the lights. (See Figure 2-31.)

As the flywheel rotates, an alternating current is induced in the coils mounted on the stator.

The CDI igniter capacitor stores the charge generated by the exciter coil. The amount of charge the exciter coil gives the capacitor effects the intensity of the spark.

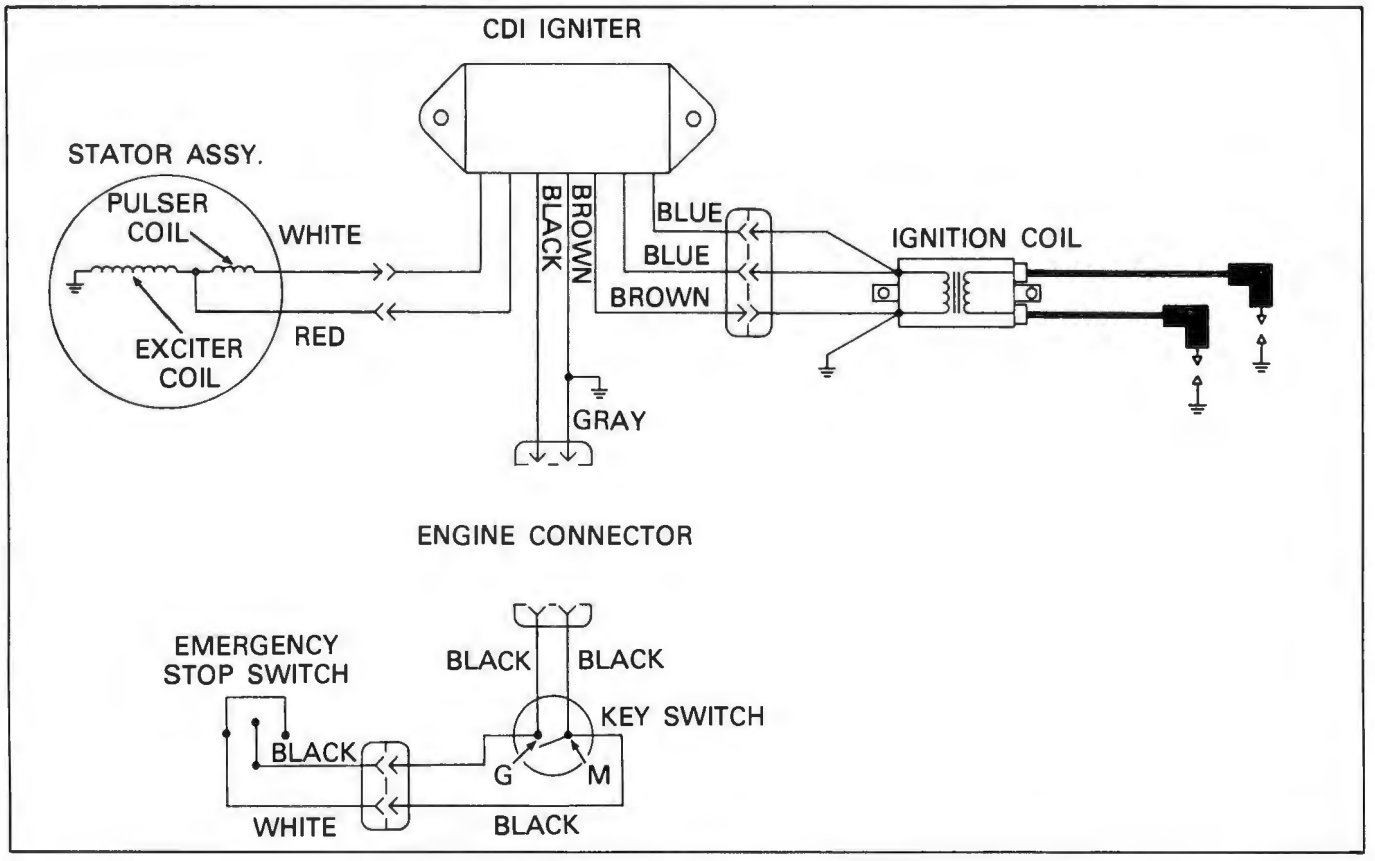

Figure 2-30

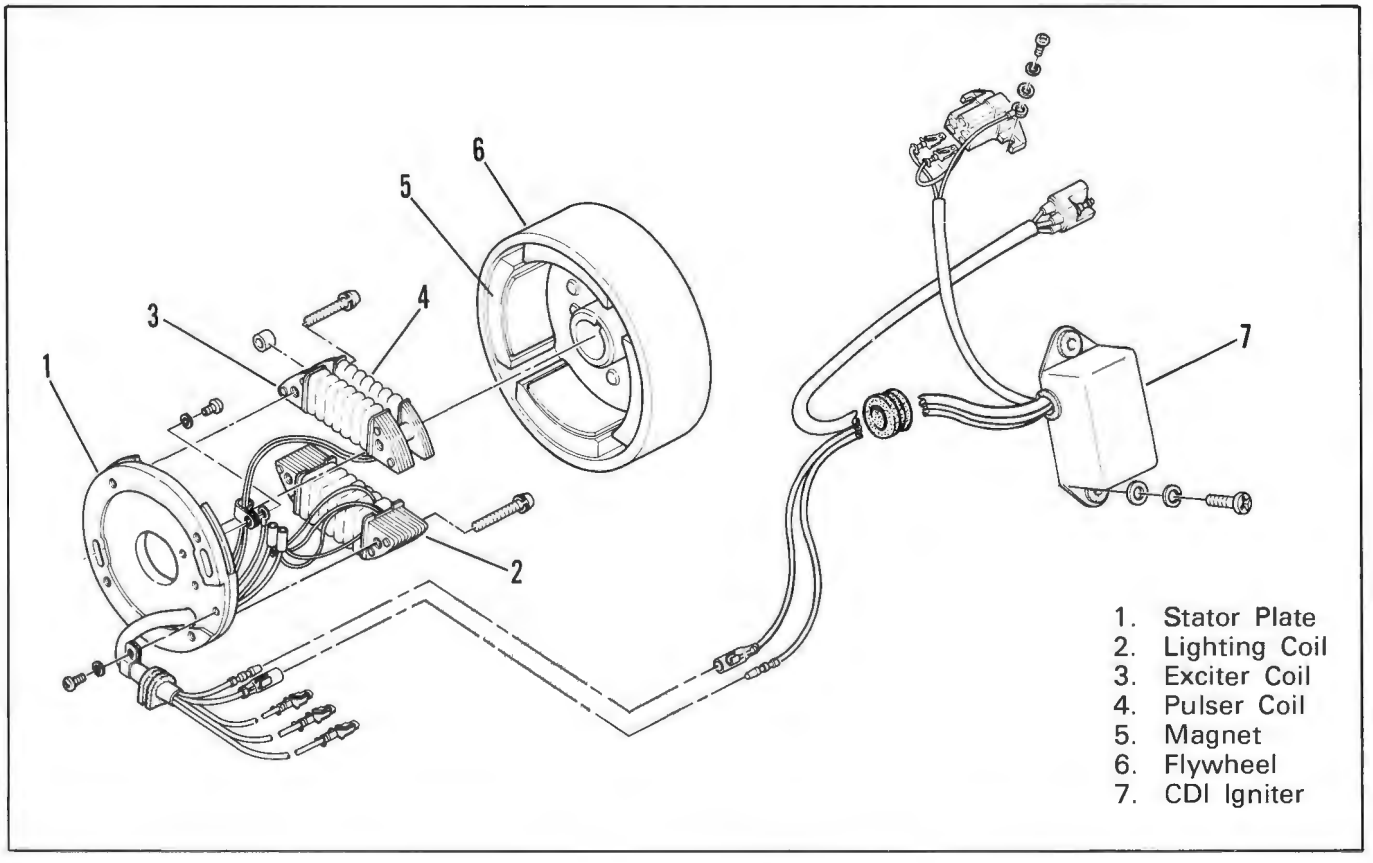

Figure 2-31

Current generated by the pulser coil causes the capacitor in the CDI igniter to release its stored charge to the ignition coil. The ignition coil primary induces a high voltage in the secondary winding, and causes a spark to jump across the spark plug electrodes.

This sequence occurs twice every rotation of the flywheel.

The pulser coil has no effect on the intensity of the spark. Its sole purpose is to signal the capacitor when to release its charge.

Electrical System Theory of Operation

The snowmobile's electrical system consists of a tail/stop light, headlight, brake light switch, headlight beam switch, ignition switch, light regulator, and a printed circuit board. A schematic representation of the snowmobile electrical system is shown in Section 4.

Power to operate the electrical components is generated in the lighting coil on the engine flywheel.

Drive System Theory of Operation

Torque Converter

A torque sensing, variable ratio, sheave-type torque converter is used to drive the snowmobile. This converter consists basically of a drive converter mounted to the power take-off of the engine, a driven converter which drives the track through the chaincase and gearing, and a V-belt which transmits rotary motion from the drive converter to the driven converter. (See Figure 2-32.)

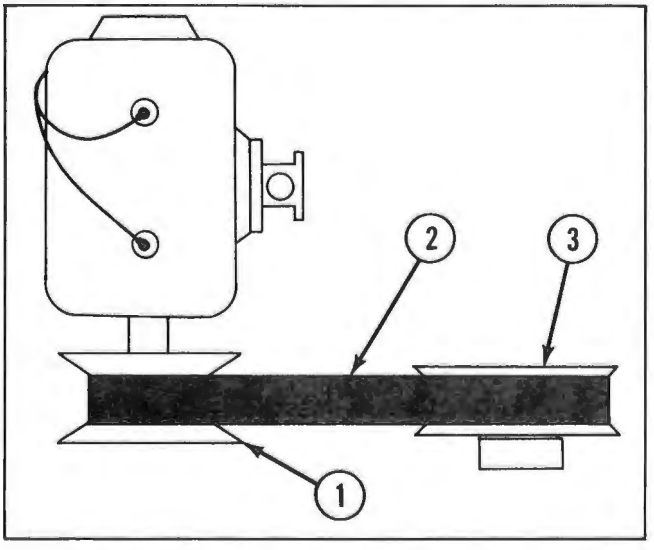

1. Drive Converter
2. V-Belt
3. Driven Converter

Figure 2-32

The method of transmitting power from the drive converter by means of a belt to the driven converter enables multiplication of engine torque as needed by the track to pull the snowmobile through varying snow depths, and up and down hills. The converter automatically shifts to maintain maximum horsepower at all operating conditions.

Drive Converter

The drive converter on the snowmobile is designed to provide maximum performance under all types of snow and load conditions. (See Figure 2-33.)

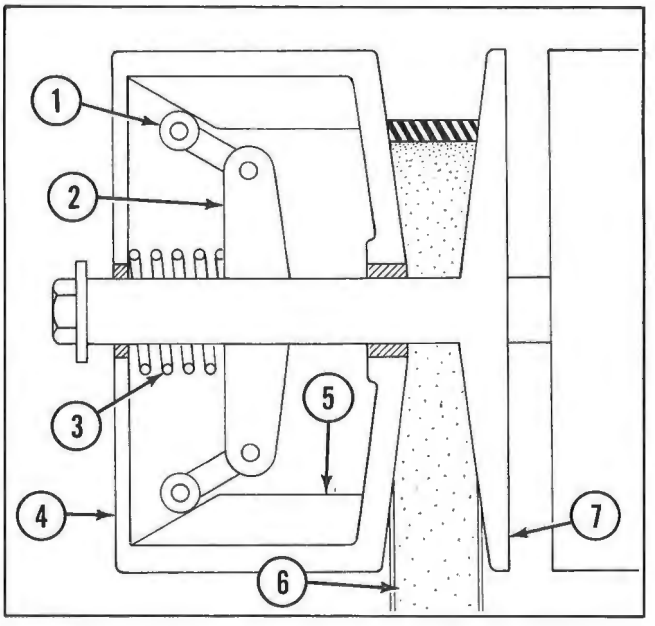

1. Roller/Weights
2. Spider Assembly
3. Spring
4. Movable Sheave
5. Ramp
6. Drive Belt
7. Stationary Sheave

Figure 2-33

There are three variables that will change the performance characteristics of the drive converter. They are as follows:

1. Spring
2. Weights
3. Ramps

The primary function of the springs is to control the initial engagement between the movable drive sheave and T.C. belt. The spring also affects engine RPM throughout the drive converter shift pattern. A weak or light spring will decrease both engagement speed and maximum engine RPM, resulting in speeding up the shift pattern.

A heavy or strong spring will increase engagement speed and maximum engine RPM, but slows down the shift pattern. The drive spring will take a "set" after approximately 50 miles (80.47 km), and lose 1/4 in. (6.35 mm) of its total length. However, no significant loss of spring tension will occur due to the decreased spring length.

The drive converter contains six weights that control engine RPM. A lighter weight will increase engagement RPM, and maintain higher RPM throughout the total shift pattern. Care must be taken not to exceed specified engine RPM or engine damage will occur. By contrast, a heavy weight will decrease engagement RPM, and also lower engine RPM throughout the shift pattern. However, the main function of the weights is to control the engine RPM through the shift pattern.

The ramp is designed so the shift pattern is within the peak torque curve of the engine. The ramp profile is the major factor in determining the characteristics of the shift pattern.

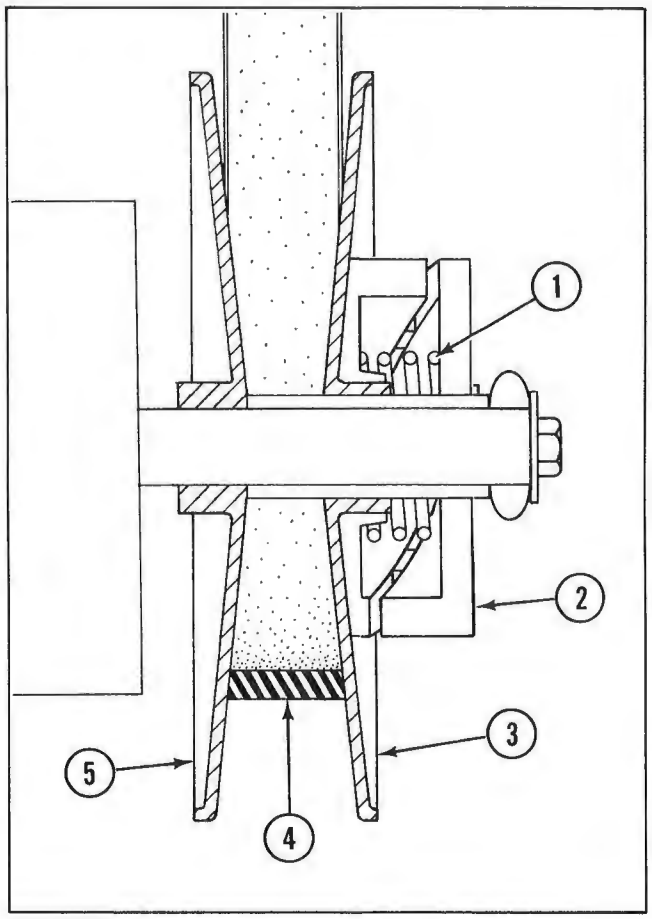

1. Spring
2. Torque Bracket Assembly
3. Movable Sheave
4. Drive Belt
5. Stationary Sheave

Figure 2-34

Driven Converter

The power that drives the track is transmitted from the drive converter through the T.C. belt to the driven converter. The driven converter is held closed by the driven torque converter spring. This positions the belt at idle, or with the engine off at the outside circumference of the driven flanges.

As the engine speed increases the driven flanges are spread apart allowing the belt to ride on a smaller diameter of the flanges. This change of flange diameter varies the drive ratio, automatically providing the most favorable ratio between the drive and driven converter for the speed and load at which the machine is operating. (See Figure 2-34.)

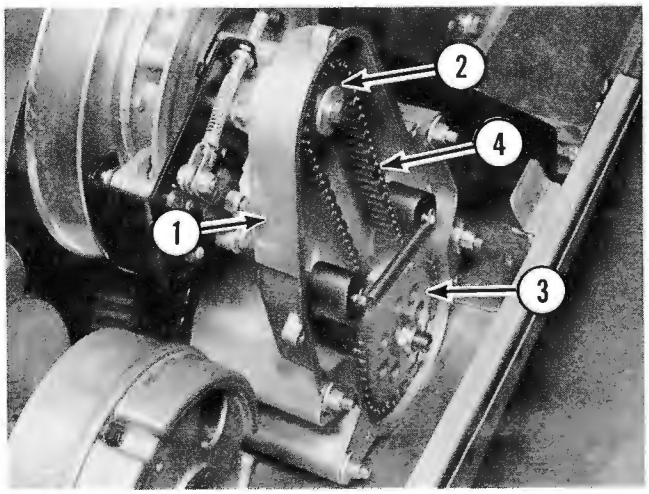

1. Chaincase
2. Drive Sprocket
3. Driven Sprocket
4. Drive Chain

Figure 2-35

Chaincase and Gearing

The chaincase provides a mounting for the driven converter shaft and the front driveshaft. The drive sprocket, drive chain and driven sprocket are housed within the chaincase. The chaincase is a sealed housing which contains lubricant for the drive chain. (See Figure 2-35.)

The top (drive) sprocket in the chaincase is attached by splines to the driven converter. The bottom (driven) sprocket is attached to the track driveshaft by splines. The drive chain transfers power from the driven converter to the track driveshaft.

Track, Suspension, and Steering System Theory of Operation

The suspension system consists of the track and slider and the skis. (See Figure 2-36.)

The track provides flotation and propels the snowmobile. Support for the track and suspension is provided by the sliders. Adjustable spring-loaded arms attached to the sliders allow suspension adjustment for the weight of the rider(s). Suspension can also be adjusted for snow conditions and steering control.

Two skis are attached to the front of the snowmobile for steering control and flotation. A wear bar at the bottom of the ski protects the ski from wear and aids in steering control. The steering system connected to the ski consists of a spindle, steering arm, tie rod and handlebars.

Two-Cycle Engine Maintenance

Inspection

Inspect the engine and mating flanges for oil residue around flanges. Replace seals if leakage is evident.

Compression Check

A simple compression check is to pull the starter rope slowly. The starter rope should display noticeable resistance.

Use a compression gage for accurate measurement. Rotate engine at starting speed, with throttle in fully-open position. A compression reading of 90 to 95 psi (6.33-6.68 kg/cm^2) per cylinder is minimum. There should be no more than 10 percent difference between the two cylinders.

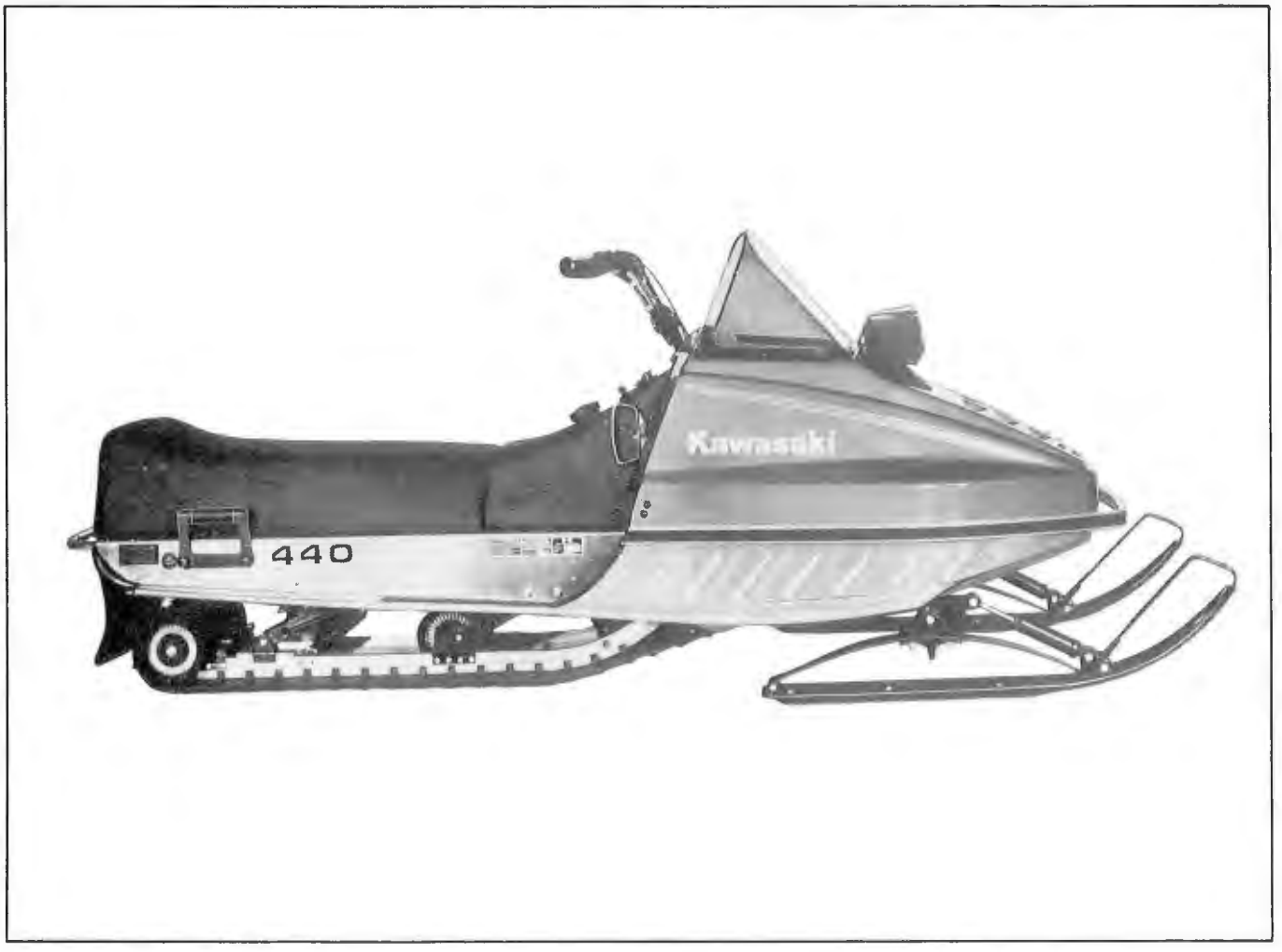

Figure 2-36

Fuel System Maintenance

Carburetor

The pilot air screw should normally be positioned 1/2 to 2 turns out from the seated position. An engine may idle smoothly out of these settings; however, problems may occur in the transition to mid range throttle operation. The pilot air screw should be adjusted for best idle within the correct adjustment range. (See Figure 2-37.)

The idle speed screw should be adjusted from 3 to 6 turns out from the coil bound (screw turned in tight). Use a tachometer to measure engine speed and adjust the idle speed screw so that the engine idle speed is 2,500 RPM. (See Figure 2-37.)

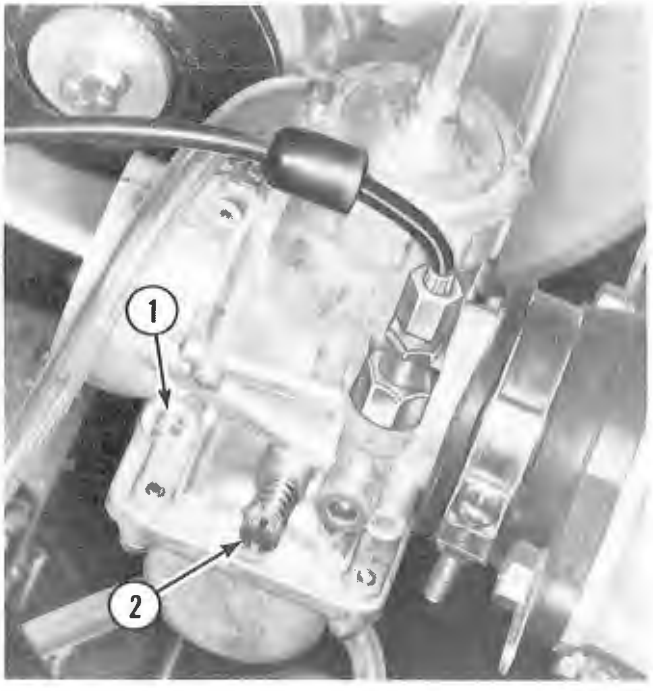

1. Pilot Air Screw
2. Idle Speed Screw

Figure 2-37

Fuel Pump

Inspect the fuel pump and impulse line clamps for loose fit or leaks.

Fuel Filter

Inspect the fuel filter. If it is dirty or leaking, replace it.

Fuel Tank and Lines

Inspect the fuel tank for leaks. Also check all fuel lines and connections for leaks or kinks.

Throttle Control Cable

With the engine off and the air silencer removed from the carburetor, leave the throttle lever at the idle position. There should be 1/16 in. (1.6 mm) free play between lever and housing. Should cable require adjustment, loosen adjuster locknut at carburator top. Adjust to obtain proper free play and retighten locknut. (See Figure 2-38.)

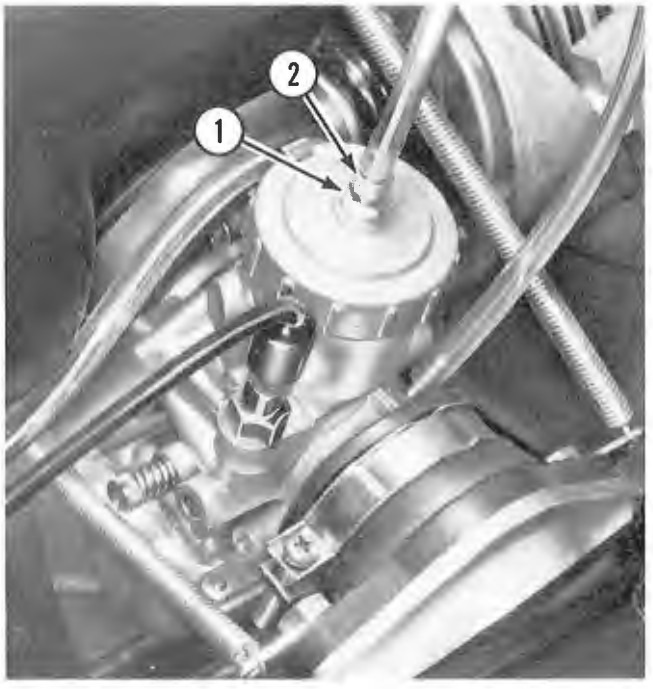

1. Locknut
2. Adjusting Screw

Figure 2-38

Enrichener Control Cable

With the enrichener lever at off, the outer casting of the enrichener cable should have 1/16 in. (1.6 mm) of free movement when raised. (See Figure 2-39.)

NOTE: Engine flooding may occur if the enrichener cable free movement is less than 1/16 in. (1.6 mm).

If adjustment of the enrichener cable is required, loosen the locknut and turn the adjusting screw to obtain the correct clearance.

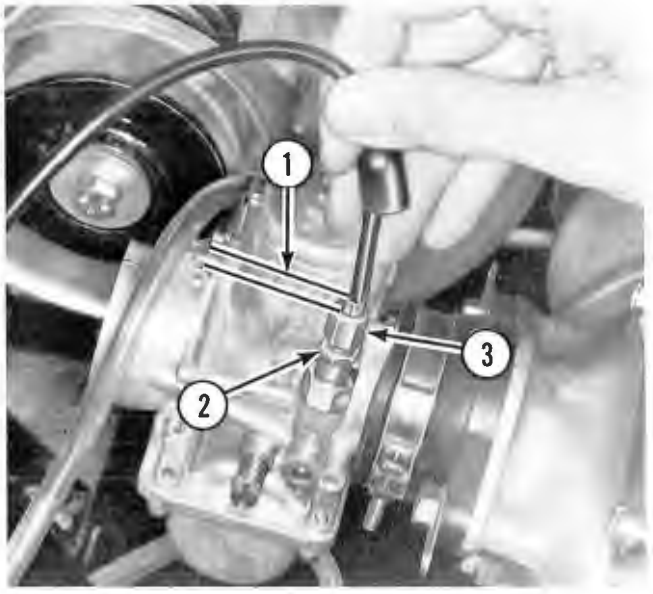

1. 1/16 Inch (1.6 mm)
2. Locknut
3. Adjusting Screw

Figure 2-39

Primer

The primer is utilized to aid the enrichener in creating a sufficiently rich mixture for cold starting. The internal components are not serviceable, and the primer must be replaced as an assembly if it is inoperative. (See Figure 2-40.)

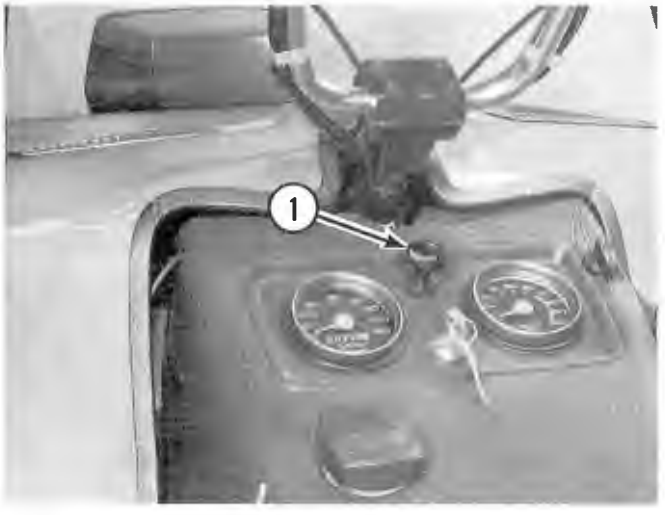

1. Primer

Figure 2-40

Ignition System Maintenance

Ignition Timing Check and Adjustment

1. Remove the two nuts securing the muffler to the rubber mounts.
2. Disconnect the springs on the exhaust manifold connection.
3. Remove the muffler.
4. Remove the recoil starter.
5. Remove both spark plugs and install a dial indicator in the right hand spark plug hole. (See Figure 2-41.)

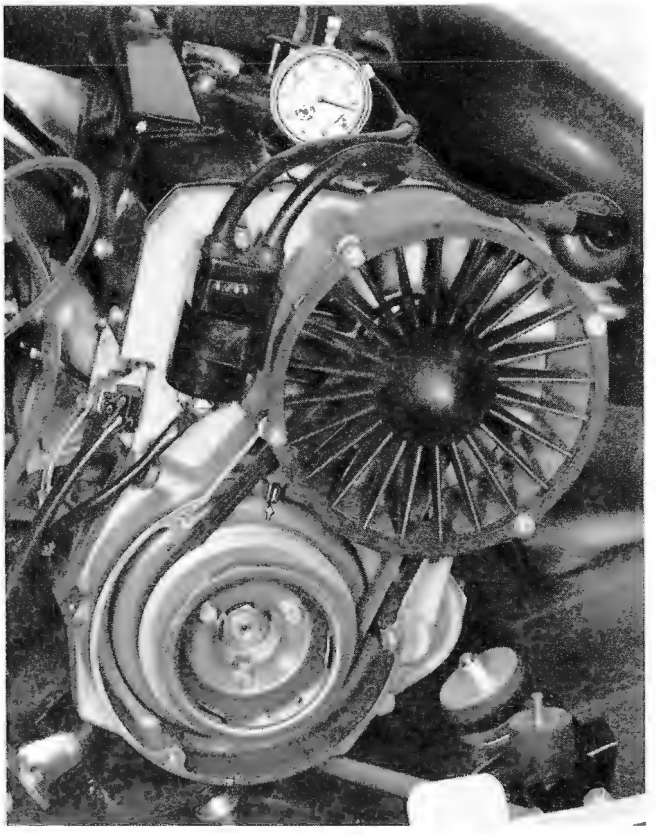

Figure 2-41

6. Position the right hand side piston at 0.073 in. (1.86 mm) before top dead center.
7. Check that F mark aligns with fixed mark on fan housing. F mark is the first mark when rotating the crank clockwise.

NOTE: If F mark on flywheel will not align, loosen the four nuts securing the fan housing to the crankcase and shift as required. If the marks cannot be aligned by this method, replace the flywheel. Check timing with a strobe light after marks have been aligned.

8. Remove the dial indicator and replace the spark plug and its lead.

9. Place muffler in position and secure with exhaust manifold springs.

10. Connect a strobe type timing light to the right hand side spark plug lead, follow light manufacturer's instructions. Use the sled tachometer to measure RPM. (See Figure 2-42.)

Figure 2-42

WARNING

Do not touch the spark plug leads while the engine is running as they will transmit a powerful electric shock.

11. With the torque converter belt removed and guard in place start the engine with the emergency start rope, run at approximately 6500 RPM, and direct the light at the fixed mark on the fan housing. If the ignition timing is correct, the light will flash as the F mark aligns with the fixed mark. Shut off engine.

12. If the timing is incorrect, remove the starter pulley and lower fan pulley, loosen the stator plate screws through holes in the flywheel, and reposition the stator plate (clockwise to retard timing; counterclockwise to advance) as necessary to obtain correct timing. (See Figure 2-43.)

CAUTION

When adjusting the stator plate, take care not to damage the coil windings.

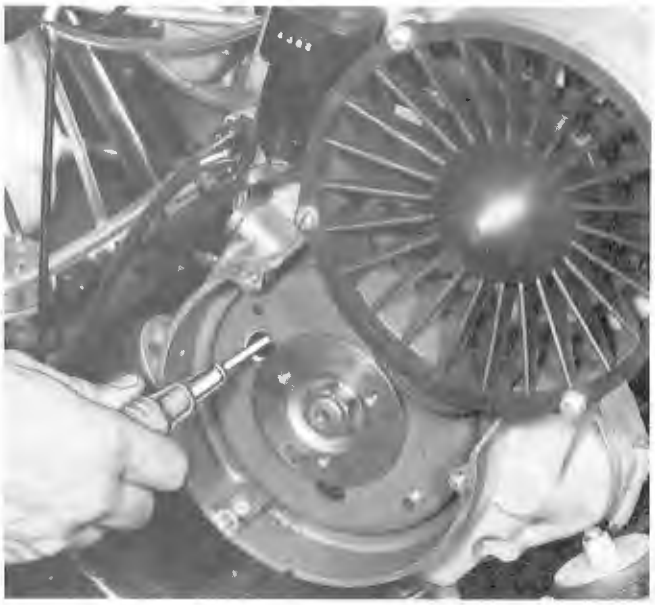

Figure 2-43

13. Tighten the screws, reinstall the lower fan pulley and starter pulley, and recheck the timing. Restarting engine should be done with emergency start rope on the starter pulley.

14. When the ignition timing is correct, remove the timing light and replace the recoil starter.

15. Reinstall the muffler mounting hardware.

Alternate Method of Ignition Timing Check and Adjustment

1. Remove the drive belt and install a fabricated pointer on the engine. (See Figure 2-44). It is important to attach the pointer to the engine rather than to the chassis, as the pointer must move with the engine on its mounting system for accuracy.

2. Remove the spark plugs from both cylinders. Install a dial indicator into the right hand cylinder spark plug hole.

3. Rotate the drive converter in the normal direction of rotation (counterclockwise) to find TDC. Rotate the drive converter clockwise to 0.073 in. (1.8542 mm) BTDC. Mark the drive converter opposite the timing pointer. (See Figure 2-44).

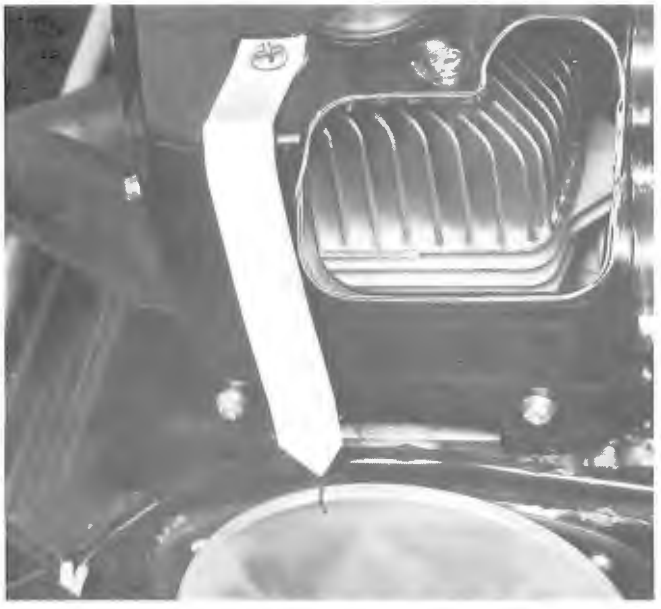

Figure 2-44

4. Remove the dial indicator and reinstall the spark plugs.

5. With the converter guard secured in place, run the engine at 6,500 RPM. Direct the timing light through the opening in the converter guard directly over the timing pointer. The timing is correct when the mark on the converter aligns with the pointer as the timing light flashes. (See Figure 2-45.)

Figure 2-45

6. If the timing is incorrect, remove the manual starter and loosen the stator plate mounting screws through the holes in the flywheel. Then, turn the stator plate as required (clockwise to retard timing, counterclockwise to advance timing) to correct the timing.

7. Recheck the timing after the above adjustment. If the timing is correct remove the timing light and reinstall the drive belt and recoil starter.

Cleaning, Inspecting, and Gapping the Spark Plug

Normal plugs have brown to greyish-tan deposits and slight electrode wear. This indicates the correct spark plug heat range. (See figure 2-46.)

Figure 2-46

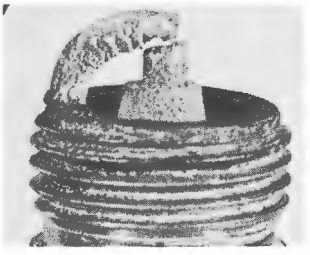

Figure 2-47

Carbon fouled plugs show dry, fluffy black deposits which may be caused by over-rich carburetion, overchoking, weak coil, or worn cables. (See Figure 2-47.)

Worn out, eroded electrodes and a pitted insulator are indications of long service. Replace old spark plugs for better fuel economy, quicker starting and smoother engine performance. (See Figure 2-48.)

Figure 2-48

Figure 2-49

Wet, oily deposits may be caused by the low speed carburetor adjustment being too rich, prolonged low speed operation, improper fuel-to-oil mixture, or worn breaker points. These plugs can usually be degreased and reinstalled. (See Figure 2-49.)

Burned or blistered insulator and badly eroded electrodes indicate overheating. Improper spark timing, low octane fuel or lean fuel/air mixtures can cause this condition. (See Figure 2-50.)

Figure 2-50

Inspect spark plugs for cracked porcelain and worn electrodes. Clean the electrodes with a point file. Adjust the gap to the specified 0.020 to 0.024 in. (0.5 to 0.6 mm). In regapping, adjust only the ground side electrode. Do not attempt to bend the center electrode; the insulation will crack. (See Figure 2-51.)

Before installing the spark plugs, be sure the washer is installed and the seat on the cylinder head is clean. Install the spark plug and tighten it to 18 to 20 ft lb (2.5 to 2.7 kg-m).

CAUTION

Do not clean old spark plugs with a sandblaster. Grit may be released into the cylinder during engine operation causing severe damage.

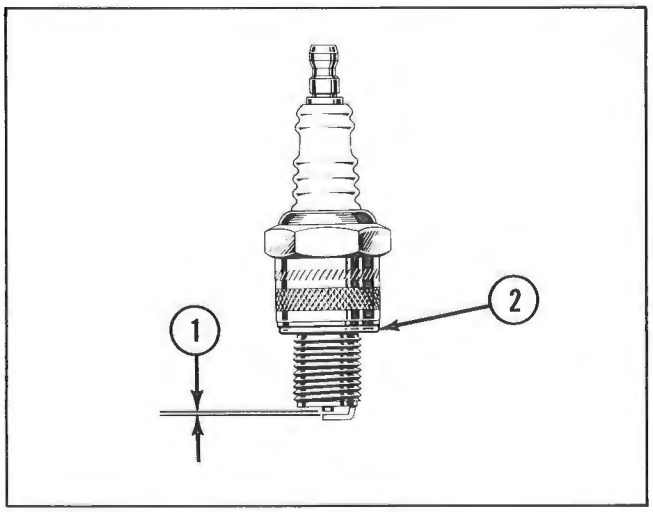

1. Gap
2. Washer

Figure 2-51

Electrical System Maintenance

Key Switch

The key switch should be lubricated with graphite once a year. The graphite will also prevent freezing of the key switch in extremely cold weather.

NOTE: Do not use an excessive amount of lubricant.

Headlight

ADJUSTMENT

The headlight can be adjusted vertically or horizontally.

To check the aim of the headlight, position the front of the snowmobile 25 ft (7,620 mm) from a wall and illuminate the low beam of the headlight. (See Figure 2-52.)

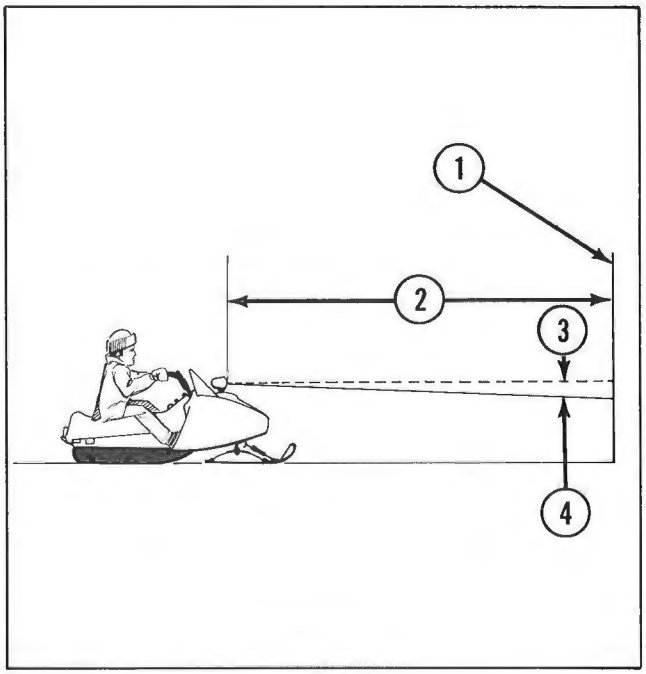

1. Wall
2. 25 ft (7,620 mm)
3. Reference Mark (Center of Headlight to Floor)
4. 2 in. (51 mm) Below Reference Mark

Figure 2-52

The headlight beam should be directly in front of the snowmobile. If the aim of the headlight beam is off to the right or to the left, adjust the headlight using the horizontal adjusting screws. (See Figure 2-53.)

1. Horizontal Adjusting Screws
2. Vertical Adjusting Screws

Figure 2-53

Measure the distance from the floor to the center of the headlight and mark the wall at the dimension measured (reference mark). (See Figure 2-52.)

NOTE: Be sure an operator is seated on the snowmobile when the engine is running to prevent the vehicle from creeping ahead and to assure proper aiming.

Illuminate the high beam. For proper headlight aim the high beam should be 2 in. (51 mm) below the reference mark. If adjustment is required, use the vertical adjusting screws. (See Figure 2-53.)

REPLACEMENT

Replace the headlight bulb from the rear of the headlight, through the access hole in the hood. Replacing the bulb from inside the hood does not disturb the headlight adjustments. Replace the headlight bulb as follows:

1. Remove the wire harness connector from the headlight.
2. Push down while turning the retaining ring counterclockwise. The retaining ring is marked top for proper indexing during installation. (See Figure 2-54.)
3. With the retaining ring removed, the bulb and socket can be pulled out of the headlight. Note that the socket is installed with the wide tab towards the top. (See Figure 2-54.)

Install the headlight bulb in the reverse order of removal.

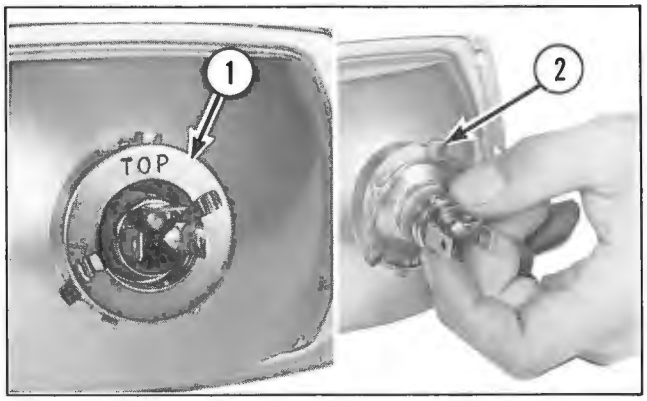

1. Retaining Ring
2. Wide Tab on Socket

Figure 2-54

Tail/Brake Light

Replace the tail and brake light bulb by removing the lens, secured by 2 screws, and then removing the lamp from the socket. (See Figure 2-55.)

Figure 2-55

Speedometer, Voltage Regulator, Circuit Board Maintenance

Speedometer

The speedometer cable should be lubricated once a year. Remove the cable from the rear of the speedometer and lubricate the cable with graphite.

Voltage Regulator

Check the connection on the circuit board from the voltage regulator. Make sure the connection is clean and tight.

CAUTION

If engine is run with voltage regulator disconnected, all the lights will burn out.

Circuit Board

Check the connectors on the circuit board to be sure they are clean and secure. (See Figure 2-56.)

WARNING

Indexing tab on connector must face upward for proper electrical polarity. Improper indexing may damage wiring harness or cause electrical sparks in engine compartment.

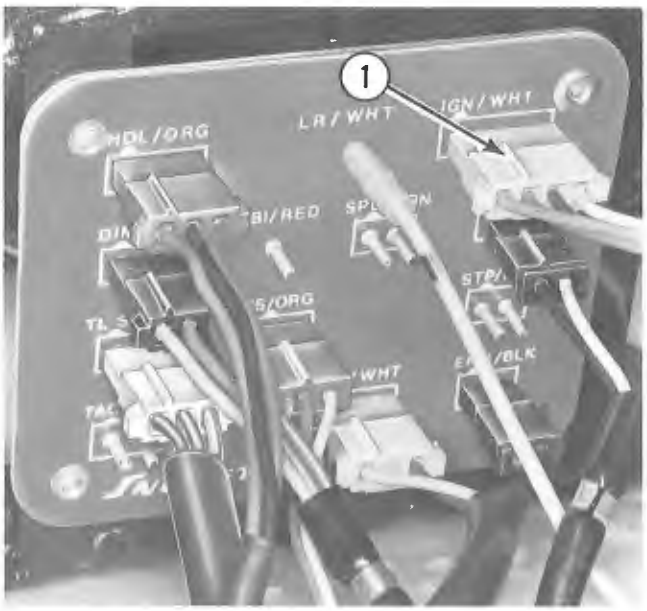

1. Indexing Tab

Figure 2-56

Drive System Maintenance

Drive Converter and Driven Converter Alignment

The converter alignment (offset) should be 0.454 in. (11.5 mm) as measured from the back face of the fixed sheave on the drive converter to the edge of the driven converter movable sheave. (See Figure 2-57.)

If adjustment of the converter alignment is required, loosen the bolts securing the engine to the mounting frame, and slide the engine left or right as necessary to obtain the 0.454 in. (11.5 mm) offset. Tighten the engine mount bolts to 30 ft lb (5.15 kg-m).

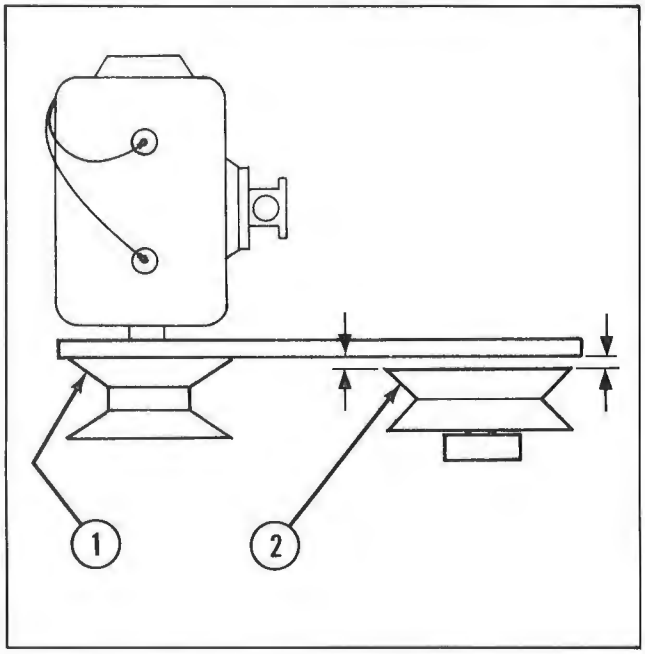

1. Fixed Sheave on Drive Converter
2. Movable Sheave on Driven Converter

Figure 2-57

Converter Center Distance Adjustment

The converter center distance should be 10.3 in. (262 mm). (See Figure 2-58.)

If adjustment of the converter center distance is required, loosen the four mounting nuts on the chaincase. The driven converter support arm must be disconnected from the chassis by removing the clevis pin from the yoke. Move the chaincase to

obtain 10.3 in. (262 mm) center distance. Tighten the chaincase mounting nuts. (See Figure 2-59.) Install the driven converter support arm to the chassis and secure the clevis pin with safety clip.

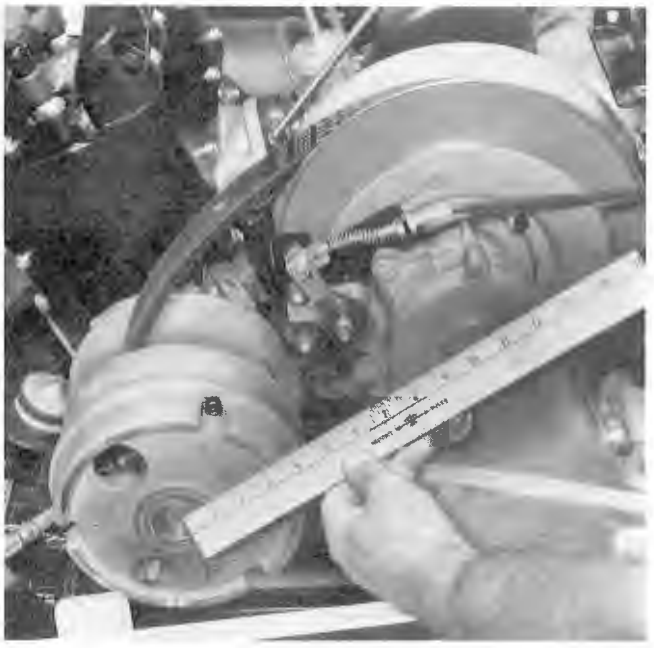

Figure 2-58

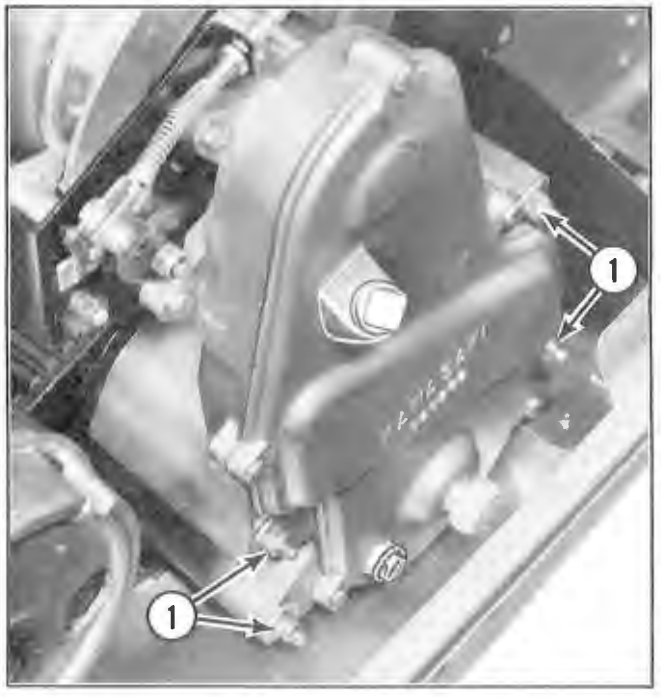

1. Chaincase Mounting Nuts

Figure 2-59

Drive Converter and Driven Converter Alignment Using Special Alignment Gauge P/N 205207

Correct converter center-to-center distance of 10.3 in. (262 mm), and converter offset distance 0.454 in. (11.5 mm) is obtained when alignment gauge P/N 205207 is correctly installed between drive and driven converter sheaves.

CENTER-TO-CENTER DISTANCE

1. Remove belt guard and remove drive belt.

2. Rotate driven converter movable sheave assembly clockwise, and insert alignment gauge between sheaves. Carefully release movable sheave assembly allowing spring tension to retain gauge in position between stationary and movable sheave assemblies.

3. Rotate drive converter assembly until hex shaft is correctly positioned in the alignment gauge.

4. If adjustment of the converter center distance is required, loosen the four chaincase mounting nuts. The driven converter support bearing arm must be disconnected from the chassis by removing the clevis pin from the yoke. Position the chaincase fore or aft as required. Tighten the chaincase mounting nuts securely. Adjust support bearing arm bolt to proper length, lock the jam nut, and connect to chassis with the clevis pin assembly.

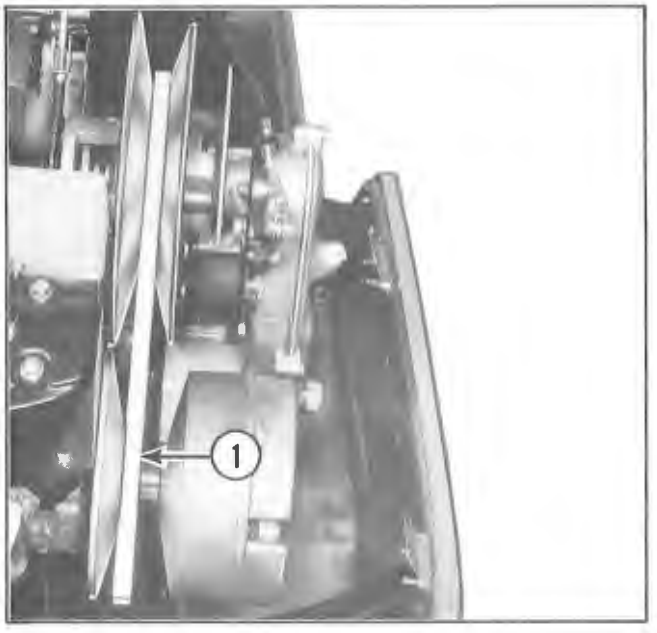

1. Alignment Tool P/N 205207

Figure 2-60

OFFSET DISTANCE

1. Correct offset distance 0.454 in. (11.5 mm) is obtained when drive converter stationary sheave fits into recess of alignment gauge when gauge is positioned on hex shaft.

2. If adjustment is necessary, loosen four engine mounting bolts and two muffler mounting bolts. Slide engine back and forth until stationary sheave fits into recess in alignment gauge. Tighten all mounting bolts securely.

PARALLELISM

1. When checking the center-to-center and offset distances, parallelism must be checked by measuring dimensions A and B as shown in Figure 2-61. Compare dimensions A and B against Notes I and II.

NOTE I: Dimension A must be more than dimension B.

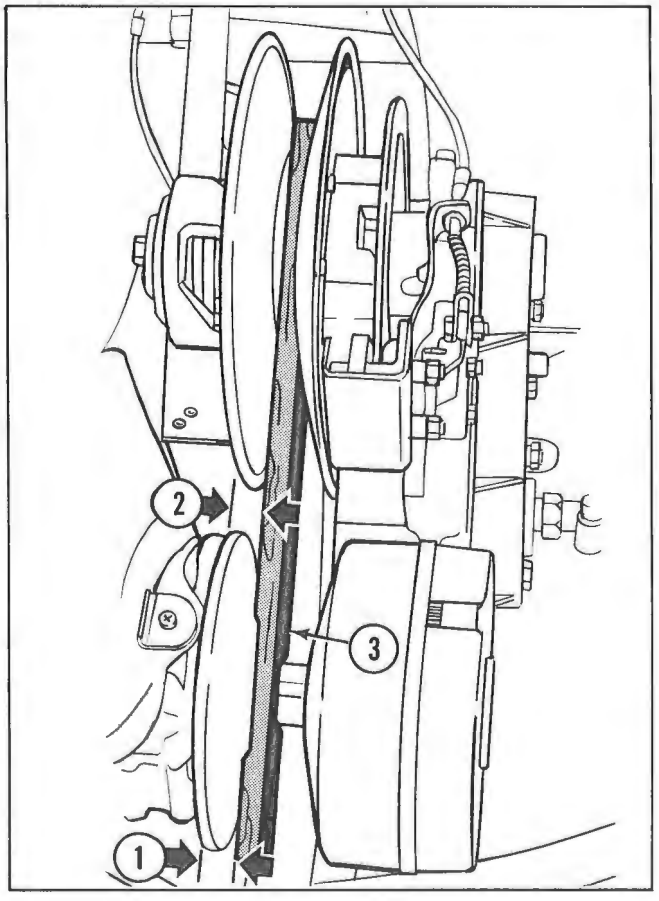

1. Distance A
2. Distance B
3. Alignment Gauge P/N 205207

Figure 2-61

NOTE II: Dimension A must never exceed dimension B by more than 1/16 in. (1.6 mm).

2. If dimension A is less than dimension B, parallelism between engine crankshaft and driven pulley is not correct. Parallelism must be adjusted as follows:

   a. Loosen engine and muffler mounting bolts and rotate the engine into the correct position.

Drive Belt

Inspect the drive belt for worn areas, cracks between the teeth, or ply separations.

NOTE: Replace drive belt when worn to a width of less than 1.125 in. (28.58 mm).

To remove the drive belt:

1. Remove the safety pin which secures the belt guard at the top, and swing the belt guard forward. (See Figure 2-62.)

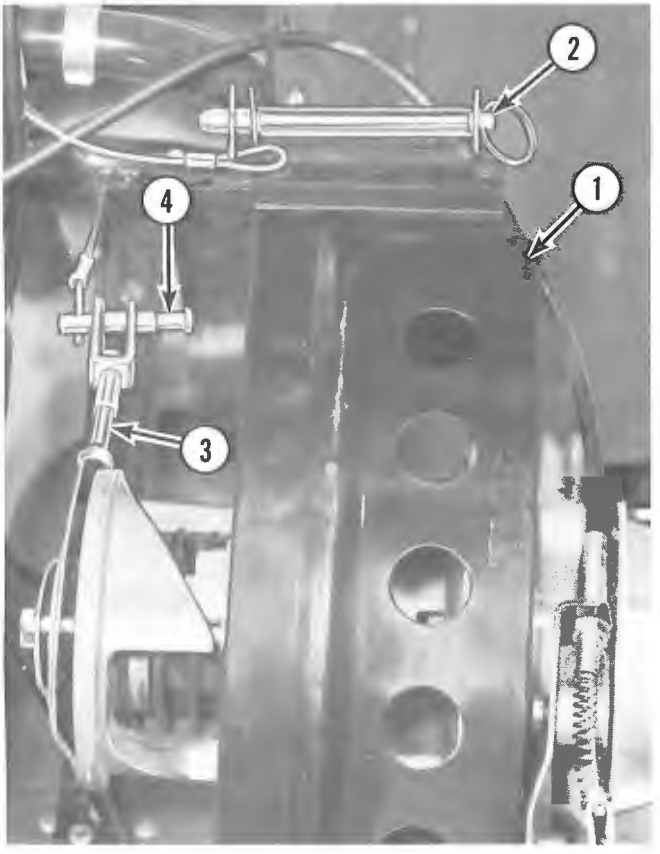

1. Belt Guard
2. Belt Guard Pin
3. Driven Converter Support Arm
4. Clevis Pin

Figure 2-62

2. Disconnect the driven converter support arm from the chassis by removing the clevis pin from the yoke.

3. Rotate the movable half of the driven sheave towards the rear of the vehicle while pushing it towards the steering post. Assistance may be required to apply the brake while rotating sheave. (See Figure 2-63.)

Figure 2-63

WARNING

Use caution when removing the drive belt from the driven converter sheave since it is under a heavy spring load. Keep fingers and hands clear when releasing sheave.

4. Roll the drive belt up and off the driven converter. Then release the movable sheave. (See Figure 2-64.)

5. Work the drive belt past the carburetor and air silencer, then remove it from the drive converter.

To install the new belt:

1. With the drive belt in position around the drive converter, work the belt past the carburetor and around the driven converter support arm.

2. Open the driven converter movable sheave to ease installation of the drive belt.

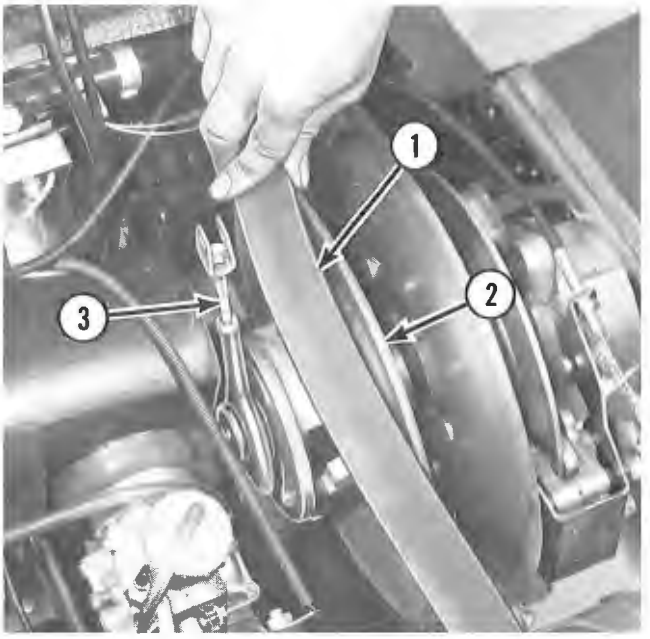

1. Drive Belt
2. Driven Converter Movable Sheave
3. Driven Converter Support Arm

Figure 2-64

3. Roll the drive belt over the top of the movable sheave, being careful not to pinch your fingers, and position in the driven converter.

4. Install the driven converter support arm to the chassis, and secure the clevis pin with safety clip.

5. Position the belt guard and secure it with the safety clip.

6. Close the hood and lock it into position with the hood latches.

NOTE: Always reinstall used belt so it will rotate in the same direction as it did originally.

Drive Converter

CAUTION

DO NOT LUBRICATE THE DRIVE CONVERTER. Any lubricant applied to the drive converter will drastically change the shifting characteristics, resulting in clutch failure and reduced drive belt life.

Clean the drive converter sheave surfaces once a year. Use a rag dipped in acetone liquid cleaner to remove water and oil. Remove rust or rubber with No. 260 and No. 320 emery cloth and polish with No. 400 emery cloth.

Driven Converter Lubrication

Lubricate all ramp sliding surfaces with low temperature grease. Lubricate the movable sheave sliding surface with a graphite lubricant. Use a solvent to remove grease and rubber from the belt contact surfaces.

Brake Adjustment

Check the brake adjustment to be sure the driven converter can be moved back and forth with just a slight brake drag on the brake disc and that the brake lever movement is less than 3/4 in. (19 mm) when applying the brake. (See Figure 2-65.)

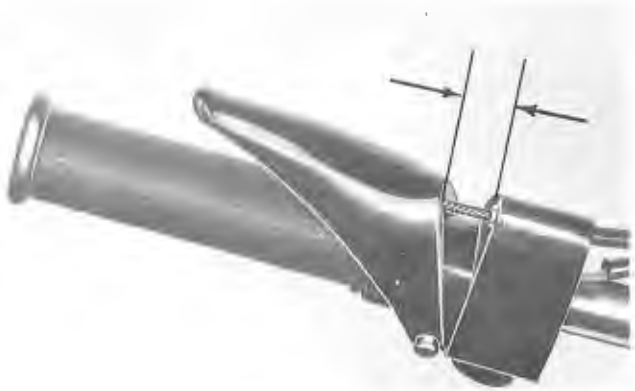

Figure 2-65

WARNING

DO NOT OVERTIGHTEN the brake. Component damage or personal injury could result.

If brake adjustment is required, turn the adjusting nut while simultaneously moving the driven converter back and forth until the brake pads just begin to move with the disc. (See Figure 2-66.)

Drive Chain

Tension of the chain is self-adjusting by two swinging, spring-loaded tensioner arms. Each arm carries a pivoting plastic guide which contacts the outside of the chain, and is connected to the opposite tensioner arm by a tensioning spring. (See Figure 2-67.) In order for the system to maintain proper chain tension, the guides must not be allowed to wear beyond specified limits, and a spring providing adequate load must be installed. Guides must be serviced when their contact surfaces become worn to not-less-than 0.12 in. (3 mm) from the pivot pin. (See Figure 2-68.) Prior to replacement, the guides may be rotated 1/2 turn and remain in use until worn to the above dimension. Springs differentiated by color, and having varying tension rates from those originally installed, are available for attaining necessary chain adjustment with varying sprocket combinations. (See Section 1.)

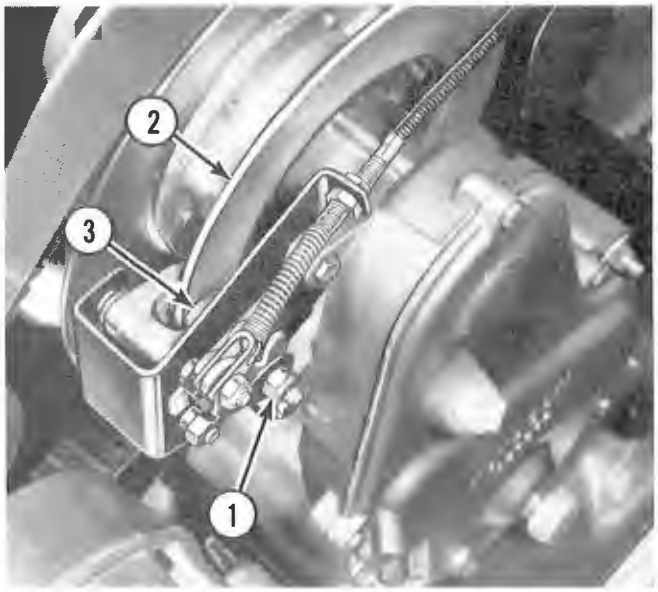

1. Brake Adjusting Nut
2. Brake Disc
3. Brake Pads

Figure 2-66

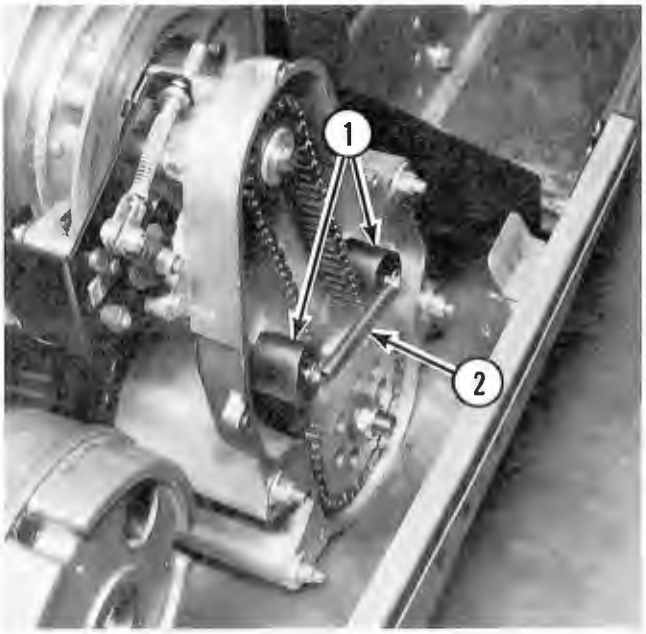

1. Chain Guides
2. Tensioner Spring

Figure 2-67

After chain service has been performed, clean any plastic sediment or dirt from the case and cover. Replace O-ring if necessary and reinstall cover. Refill chaincase per instructions given in Chaincase and Gearing Lubrication.

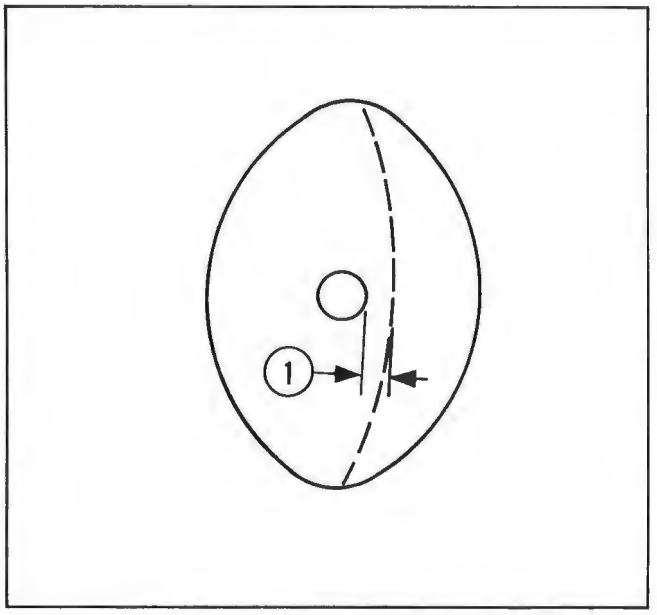

1. Chain Guide Wear Limit

Figure 2-68

Chaincase and Gearing Lubrication

The drive chain operates in an enclosed chaincase and is lubricated by a special chain oil. The oil level should be checked every 20 hours as described below. If filling is required, use only Kawasaki Chain Lubricant which is specially formulated for this application.

To fill the chaincase:

Remove the plugs in the chaincase cover, at the top (fill plug) and bottom (oil level plug). (See Figure 2-69.)

Pour Kawasaki Chain Lubricant into the chaincase through the top hole until it is level with the bottom hole lower edge.

Install the upper and lower plugs into the chaincase cover.

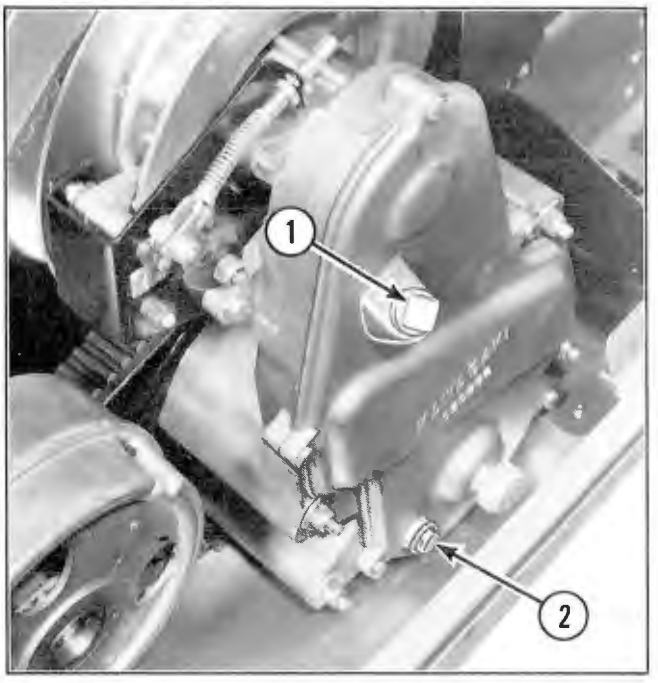

1. Fill Plug
2. Oil Level Plug

Figure 2-69

Track, Suspension, and Steering System Maintenance

The steering system components should be checked periodically for excessive wear and security of fasteners (nuts, bolts, etc.). Proper ski alignment cannot be maintained with worn components.

Ski Alignment

Alignment should be checked at the beginning of each season, whenever the ski is subjected to a hard side impact, or when steering system components are replaced. Check the ski alignment as follows:

1. Place a long board (or suitable straightedge) against the edge of the track, and measure the clearance between the board and centerline of the ski. Position the ski so that the distance measured between the ski centerline and edge of the board is the same at the front and rear of the ski. (See Figure 2-70.)

2. When the ski is parallel to the outside edge of the track, check the steering handlebar for centering.

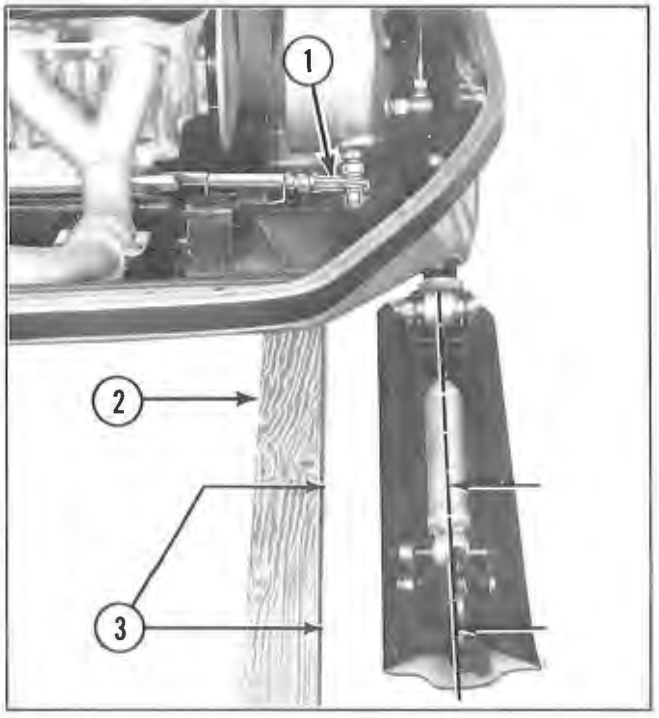

1. Tie Rod End
2. Straightedge Against Track
3. Measure Clearance Here

Figure 2-70

3. If the handlebar requires centering, loosen the locknuts and turn the tie rod end adjusting bolt in the direction necessary to center the handlebar. (See Figure 2-71.)

NOTE: Be sure the ski remains parallel to the straightedge while turning the tie rod end adjusting bolt.

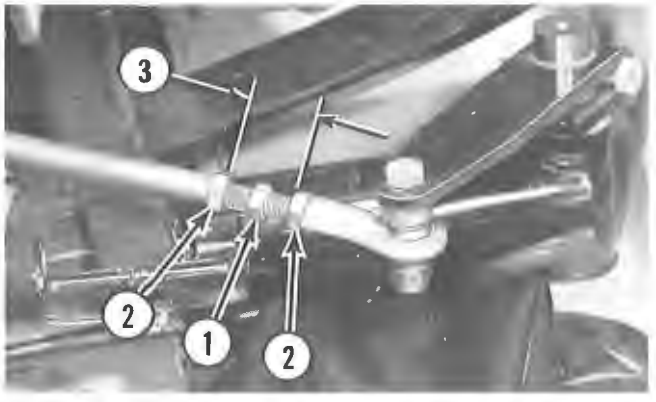

1. Tie Rod End Adjusting Bolt
2. Locknuts
3. 1-1/4 in. (32 mm) Maximum

Figure 2-71

WARNING

If the dimension shown in Figure 2-71 exceeds 1-1/4 in. (32 mm), refer to Section 3 and check for damaged steering system components.

4. To align the other ski, move both ski tips towards the center of the snowmobile to remove the steering linkage play. Turn the tie rod end adjusting bolt (located below the muffler) to obtain an equal distance from ski center to ski center when measured at the front and rear of the skis. (See Figure 2-72.)

5. Tighten all the hardware (nuts, bolts, etc.) in the steering system.

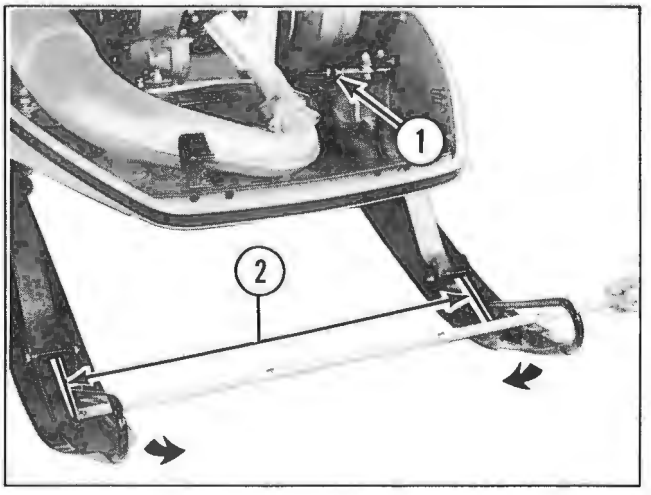

1. Tie Rod End Adjusting Bolt
2. Equal Distance Front And Rear

Figure 2-72

Ski Runners

Excessively worn ski runners can greatly reduce the handling of your snowmobile. The runners on the bottom of each ski should be inspected often, since the wear rate depends on the surface the snowmobile is operated on. Replacement is recommended when the runners are more than 3/4 worn at any point. Refer to Section 3 for Ski Runner Replacement.

Suspension Adjustment

The slider suspension is fully adjustable for rider comfort.

The adjustments consist of changing the pre-load on the suspension springs. A suspension spring is on each side of the front and rear suspension arms.

Ride Adjustment

Ride adjustment is controlled by changing spring tension of the rear arm only. Tightening the adjustment nut will stiffen the ride and carry more driver or passenger weight. See Figure 2-73.

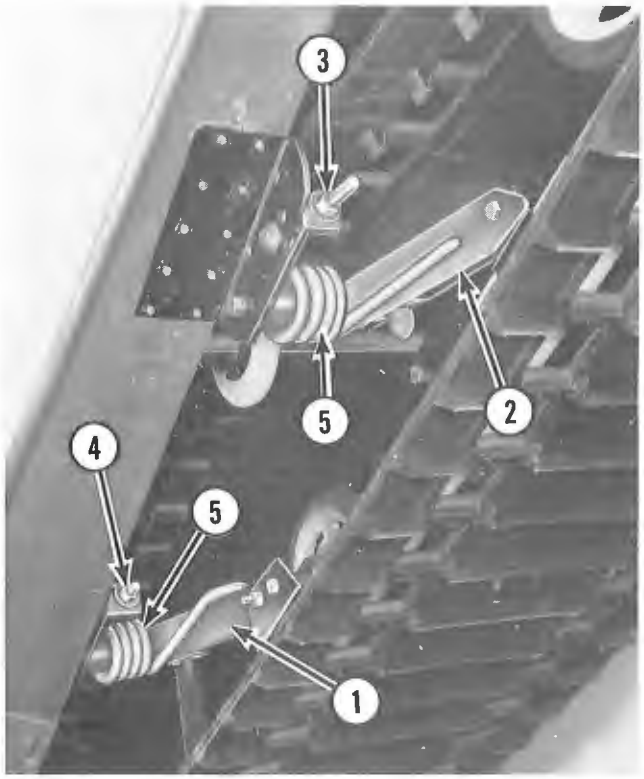

1. Front Suspension Arm
2. Rear Suspension Arm
3. Adjustment Nut (Ride)
4. Adjustment Nut (Handling)
5. Suspension Springs

Figure 2-73

CAUTION

Always adjust the pre-load (tension) of the springs on each side of the suspension arm equally. Excessive tension of one spring can cause spring breakage. (See Figure 2-74).

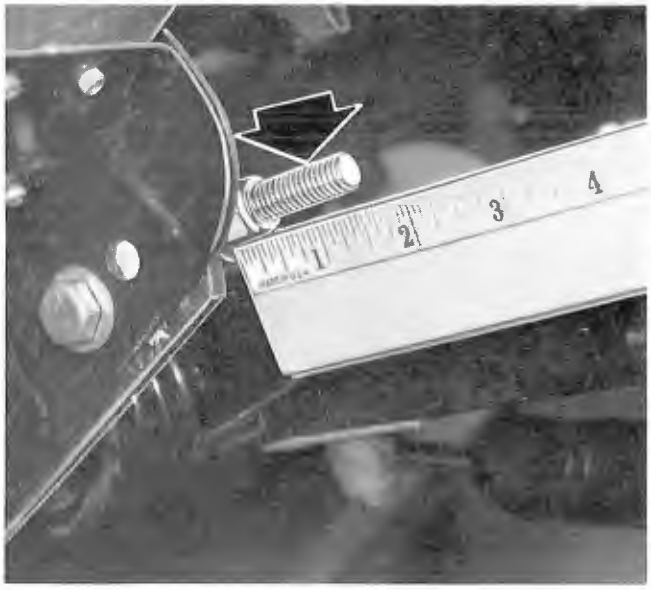

Figure 2-74

Handling Adjustment

The handling adjustment is controlled by changing the spring tension of the front arm only. (See Figure 2-73).

Any changes to the adjusting nuts will change the snowmobile's handling characteristics. If the nuts are tightened, the front of the suspension presses harder on the ground and results in less ski pressure. Loosening the nuts causes the front of the suspension to have less pressure on the ground, causing the ski pressure to increase. A change in ski pressure will affect the vehicle steering response.

Track Tension Adjustment

WARNING

While raising the snowmobile off the ground, place the skis against a stationary object and secure the vehicle to prevent personal injury.

WARNING

To prevent personal injury, never adjust track tension with the engine running.

1. With the track completely off the ground, brace the snowmobile so it cannot fall, then hang a 8 to 10 lb (2.2 to 3.6 kg) weight from the mid point of the track.

2. The clearance from the bottom of the wear strip to the top of the track should be 3/4 in. (19 mm) when measured directly below the shock absorber upper mount bolt. (See Figure 2-75.)

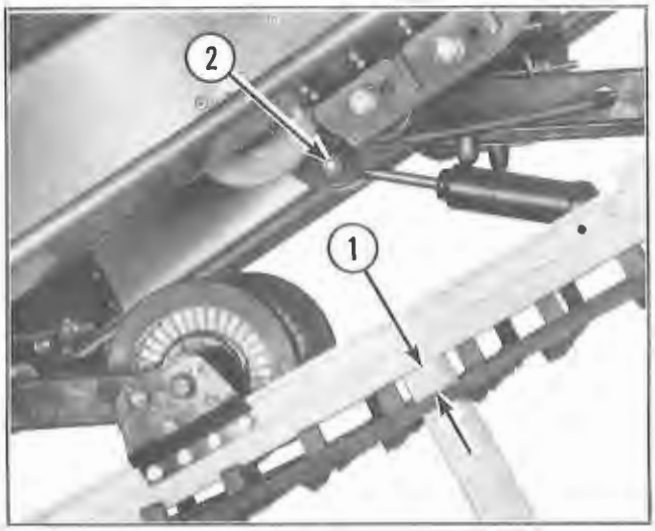

1. 3/4 in. (19 mm)
2. Shock Absorber Upper Mount Bolt

Figure 2-75

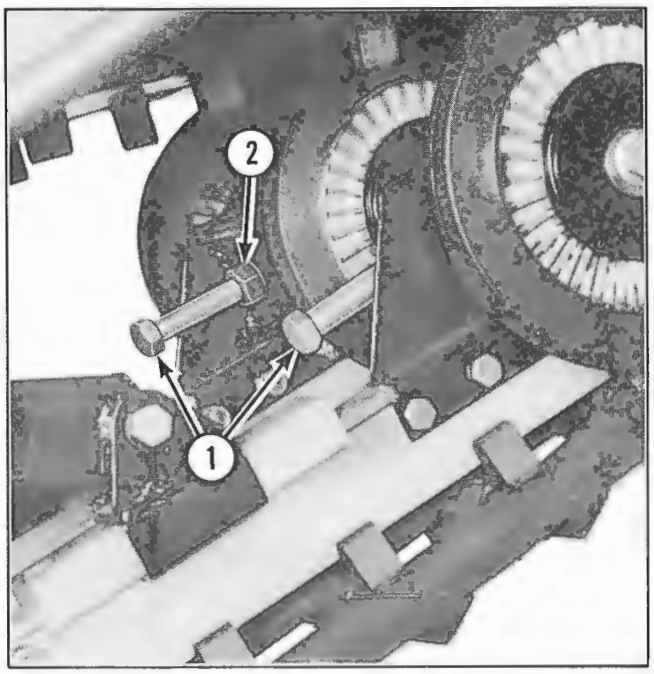

1. Rear Axle Adjusting Bolts
2. Jam Nut

Figure 2-76

3. If adjustment is necessary, loosen the jam nuts, and turn the rear axle adjusting bolts as required to obtain the specified wear-strip to track clearance. (See Figure 2-76.) Be sure end or nose of adjusting bolt is in recess of shaft when making this adjustment.

CAUTION

Track adjusting bolt ends must seat in rear axle recesses in order to prevent track damage.

4. When the proper tension is attained, be sure both adjusting bolts are the same length when measured from the bolt head to the rear axle bracket. (See Figure 2-76.)

Track Alignment

WARNING

To prevent injury, never measure track alignment while the engine is running.

Remove the weight from the track, start the engine and push the throttle only enough to turn the track slowly a few revolutions, then stop the engine and check the alignment.

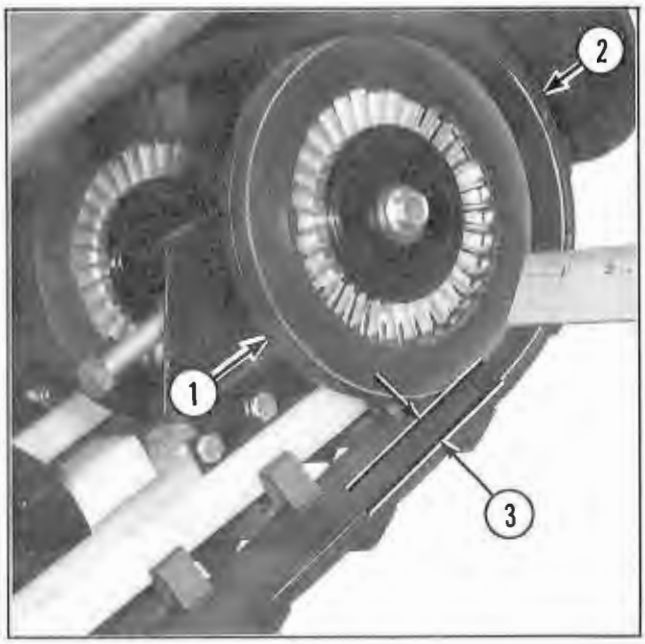

1. Idler Wheel
2. Edge of Track
3. Dimension Equal on Both Sides

Figure 2-77

The track is aligned when the distance between the rear idler wheel and edge of the track is equal on both sides. (See Figure 2-77.)

If the track runs to one side, tighten the rear axle adjusting bolt on the same side, approximately 1/2 turn, then restart the engine and recheck the alignment.

Storage

Preparation for Storage

1. Wash the snowmobile. Thoroughly clean the snowmobile by hosing off all dirt and grime from the suspension.

2. Remove the air intake silencer from the carburetor and start the engine. With the engine running at idle speed, slowly inject B.I.A. certified T.C.W. oil into the carburetor. Stop the engine when excessive smoking from the muffler outlet pipe occurs. This procedure lubricates the internal engine components to prevent rust. Replace air intake silencer on the carburetor.

3. Siphon remaining fuel from the fuel tank.

4. Plug the openings of the air intake silencer and muffler outlet with a rag or masking tape.

5. Replace the fuel filter.

6. Check the chaincase lubricant level.

7. Remove the drive belt.

CAUTION

DO NOT LUBRICATE THE DRIVE CONVERTER.

8. Apply a light coat of oil to both driven converter sheaves to prevent rust.

9. Block the rear of the snowmobile off the ground to remove weight from the suspension and track.

10. Loosen the rear axle adjusting bolts to relieve the track tension.

11. Cover the snowmobile to protect it from dirt and dust.

12. Store the snowmobile in a dry, well ventilated area.

Removal From Storage

1. Fill the fuel tank with fresh fuel mixture.

2. Remove the plugs (masking tape or rags) from the air intake silencer and muffler outlet.

3. Remove the oil from the driven converter sheaves using a suitable solvent. The converter pulleys must be clean and dry.

4. Install a new drive belt.

5. Adjust the track tension.

6. With the rear of the snowmobile off the ground start the engine. Rotate the track several revolutions at low speed and check the track alignment.

7. Check brake and throttle control adjustments.

8. Replace the spark plugs after the first 1/2 hour of operation. This will allow the oil used to lubricate the engine during storage to collect on the old spark plugs.

Repair

Table of Contents

3

Troubleshooting

Isolating a malfunction is as important as correcting the trouble. Use a good systematic approach to locate the problem in the minimum amount of time. All service operations can be solved by following these three steps:

1. Identify the problem
2. Determine cause of the problem
3. Correct the problem

Obtain from the owner an accurate description of the trouble, operating conditions, and maintenance history. In many cases, these will help to isolate the trouble. Sometimes solving the problem is not enough, and the cause has created other undetected problems. Use the Troubleshooting Charts as a guide in solving the problem. If additional interrelated problems exist, refer to appropriate portion of Section 3 for major repair procedures.

Engine Problem	Condition	Remedy
Engine does not start - no spark.	1. Key switch not ON or malfunctioning.	1. Turn switch ON or replace.
	2. Emergency stop switch in OFF position or malfunctioning.	2. Move switch to ON or replace stop switch.
	3. Spark plug(s) fouled, oiled or damaged.	3. Replace spark plug(s).
	4. Plug cap(s) damaged, leaking or shorted.	4. Replace plug cap(s).
	5. High tension wire(s) loose, grounded or shorted.	5. Service high tension wire(s)/ coil(s).
	6. Defective CDI igniter.	6. Replace CDI igniter.
	7. Defective exciter coil.	7. Replace exciter coil.
	8. Defective pulser coil.	8. Replace pulser coil.
	9. Defective ignition coil.	9. Replace ignition coil.
	10. Weak flywheel magnets.	10. Replace the flywheel.
Engine will not start - does not get fuel.	1. Fuel tank empty.	1. Fill fuel tank with fuel.
	2. Cracked, broken or pinched fuel line.	2. Replace the fuel line.
	3. Obstructed or damaged fuel pump filter.	3. Clean or replace fuel pump filter.
	4. Carburetor jets plugged or fuel pump malfunctioning.	4. Service the carburetor or the fuel pump.
	5. Impulse line is cracked, broken or pinched.	5. Replace the impulse line.
	6. Carburetor adjusted incorrectly.	6. Adjust the carburetor.

Engine Problem (continued)	Condition	Remedy
Engine will not start - fuel will not ignite.	1. Air leak between carburetor, silencer seal or cylinder.	1. Tighten mounting bolt and nuts.
	2. Carburetor adjusted incorrectly.	2. Adjust the carburetor.
	3. Water in carburetor.	3. Disassemble and clean carburetor.
	4. Engine is flooded.	4. Turn key switch OFF, remove spark plugs and dry them - crank engine over 5-10 times. Install spark plugs and start engine. If engine continues to flood, check carburetor.
	5. No compression (worn or broken rings, scored piston, hole in piston or damaged cylinder).	5. Check compression, replace worn or damaged parts.
	6. Blown head gasket.	6. Replace head gasket.
Engine does not idle or idle RPM fluctuates.	1. Air screw adjusted incorrectly.	1. Adjust air screw.
	2. Idle screw adjusted incorrectly.	2. Adjust idle screw.
	3. Defective fuel pump (check valve).	3. Service the fuel pump (check valve).
	4. Idle screw broken and embedded in main carburetor body casting.	4. Replace the idle screw and the main carburetor body casting.
	5. Impulse line cracked, kinked or broken.	5. Replace or repair impulse line.
	6. Enrichener cable adjusted incorrectly.	6. Adjust enrichener cable.
	7. Oil seals leaking.	7. Replace oil seals.
	8. Air leak (pressure check engine).	8. Disassemble and replace worn, defective, or damaged parts.
Engine develops power loss or runs on one cylinder.	1. Fouled or defective spark plug(s).	1. Replace the spark plug(s).
	2. Obstruction inside of muffler.	2. Remove obstruction or replace muffler.
	3. Defective CDI igniter.	3. Replace CDI igniter.
	4. In-line filter obstructed.	4. Replace in-line filter.

Engine Problem (continued)	Condition	Remedy
Engine develops power loss or runs on one cylinder (Continued)	5. Excessive carbon buildup in exhaust port(s).	5. Clean exhaust port(s).
	6. Defective pulser coil.	6. Replace pulser coil.
	7. Damaged or worn rings.	7. Replace the rings.
	8. Low crankcase pressure.	8. Check crankcase for leaks; replace oil seal or gasket.
	9. Damaged piston.	9. Replace piston and related component(s).
	10. Damaged head gasket.	10. Replace gasket.
	11 . Broken (shorted) high tension leads.	11. Replace complete ignition coil.
	12. Defective plug cap(s).	12. Replace cap(s).
Engine overheats.	1. Incorrect spark plug(s).	1. Install correct spark plug(s).
	2. Cooling fins obstructed.	2. Clean cooling fins.
	3. Air leak between carburetor, intake manifold or cylinders.	3. Replace gaskets, tighten mounting hardware.
	4. Caburetor adjusted incorrectly.	4. Adjust carburetor
	5. Excessive carbon deposits in combustion chamber, exhaust port or muffler.	5. Clean affected components.
	6. Damaged rings caused by excessive carbon buildup.	6. Clean or replace rings.
Engine backfires; has irregular running condition. Note: Engine may eventually overheat.	1. High tension lead wire shorting out.	1. Replace complete ignition coil.
	2. Fouled or incorrect spark plug (heat range too hot).	2. Replace spark plug or install spark plug having colder heat range.
	3. Air leak between carburetor and intake manifold.	3. Check carburetor holder to make sure it is not warped.
	4. Air leak between intake manifold and cylinders.	4. Install new intake manifold gaskets.
Engine four-cycles.	1. Carburetor incorrectly adjusted.	1. Adjust carburetor.
	2. Dirt between needle valve and valve seat.	2. Service carburetor.

Engine Problem (continued)	Condition	Remedy
Engine stops (suddenly) after running.	1. Defective ignition coil.	1. Replace ignition coil.
	2. Obstruction in fuel tank or fuel filter.	2. Clean or replace filter.
	3. Fuel line obstructed or pinched.	3. Remove obstruction, remove pinched area from fuel line.
	4. Defective CDI igniter.	4. Replace CDI igniter.
	5. Spark plug bridged.	5. Replace spark plug.
	6. Seized piston(s).	6. Replace piston and any affected components.
	7. Seized crankshaft.	7. Replace crankshaft and any affected components.
	8. Defective exciter coil.	8. Replace exciter coil.
	9. Defective pulser coil.	9. Replace pulser coil.
Engine stops (gradually) after running.	1. Obstruction in fuel tank or fuel filter.	1. Clean or replace filter.
	2. Fuel line obstructed or pinched.	2. Remove obstruction, remove pinched area from fuel line.
	3. Damaged head gasket(s).	3. Replace head gasket(s).
	4. Loose cylinder head.	4. Tighten cylinder head nuts to correct torque.
	5. Loose spark plug(s).	5. Tighten spark plug(s) to correct torque.

Drive Converter Problem	Condition	Remedy
Drive converter engages before specified RPM.	1. Incorrect spring.	1. Install correct spring.
	2. Weak or damaged spring.	2. Replace spring.
	3. Incorrect weights.	3. Install correct weights.
Drive converter engages after specified RPM.	1. Incorrect spring.	1. Install correct spring.
	2. Incorrect weights.	2. Install correct weights.
	3. Dirty movable sheave.	3. Clean movable sheave.
	4. Worn (flat spots) rollers and ramps.	4. Replace rollers and ramps.
	5. Bushing in housing worn excessively on inside diameter.	5. Replace components as required.

Drive Converter Problem	Condition	Remedy
Maximum drive converter RPM too high.	1. Incorrect weights.	1. Install correct weights.
	2. Incorrect ramps (ramp angle too steep at top).	2. Install correct ramps.
	3. Short belt or incorrect center to center distance.	3. Install new belt and establish correct offset and center to center distance.
Maximum drive converter RPM too low.	1. Incorrect weights (too heavy).	1. Install correct weights.
	2. Incorrect ramps (ramp angle too flat at top).	2. Install correct ramps.
	3. Long belt or incorrect center to center distance.	3. Install new belt and establish correct offset and center to center distance.
Shifting too quickly.	1. Incorrect weights (too heavy).	1. Install correct weights.
	2. Incorrect ramps (ramp angle too flat).	2. Install correct ramps.
	3. Weak drive spring.	3. Replace spring.
	4. Driven spring preload incorrect (too loose).	4. Correct spring preload.
Shifting too slowly.	1. Incorrect weights (too light).	1. Install correct weights.
	2. Incorrect ramps (ramp angle too steep).	2. Correct ramps.
	3. Spring too strong.	3. Replace spring.
	4. Driven spring preload too tight.	4. Decrease spring preload.
Belt deposits on stationary sheave and movable sheave.	1. Wrong offset and center to center distance.	1. Remove belt deposits and establish correct offset and center to center distance.
Drive converter will not disengage at idle - engine starts hard and stalls because of belt drag.	1. Loose movable sheave bushing setscrews.	1. Stake movable sheave set screws.
	2. Drive belt outside circumference below specifications.	2. Replace drive belt.
	3. Thickness of belt on inside diameter exceeds specifications.	3. Check drive belt specifications (belt thickness on inside diameter).

Drive Belt Problem	Condition	Remedy
Side of belt glazed or baked - not normal, caused by excessive heat buildup.	1. Incorrect belt - excessive slippage.	1. Install correct drive belt.

Drive Belt Problem (continued)	Condition	Remedy
Side of belt glazed or baked-not normal, caused by excessive heat buildup. (continued)	2. Too much throttle applied under heavy load - excessive slippage.	2. Tell driver to decrease throttle under heavy load condition; install new belt.
	3. Weak drive converter spring.	3. Perform spring pressure test; install new spring if spring is weak.
	4. Drive converter engagement rpm too low.	4. Adjust engagement rpm - See Specifications.
	5. Improper drive converter operation (sticking, etc.).	5. Remove and repair drive converter; install new belt if one is needed.
	6. Drive converter and driven converter offset/center to center is incorrect.	6. Check and adjust, install new belt if one is needed.
	7. Oil or grease on drive converter or driven converter sheave surface.	7. Clean sheaves; install new belt if one is needed.
Lugs worn off inside of belt.	1. Drive converter engages suddenly (engagement speed too high).	1. Remove and repair drive converter; install new belt, if one is needed.
	2. Center to center distance too far apart or belt too short.	2. Alter center to center distance or install longer belt.
Belt worn in one spot.	1. Track frozen to skid frame, front drive or ground.	1. Free track and install new belt.
	2. Incorrect track tension.	2. Adjust track tension and install new belt.
	3. Idle speed too high.	3. Reduce idle rpm and install new belt.
	4. Improper operation of drive converter.	4. Repair or replace drive converter and install new belt.
Cracks at base of belt lug.	1. Continuous overrevving when snowmobile is operated.	1. Decrease rpm and install new belt.

Chaincase Problem	Condition	Remedy
Rattle in chaincase.	1. Incorrect chain tension.	1. Check chain tensioner guides and spring.
	2. Chain stretched beyond adjustable limit.	2. Install new chain and sprockets.
Chain slippage.	1. Incorrect chain tension.	1. Check chain tensioner guides and spring.
	2. Chain stretched beyond adjustable limit.	2. Install new chain and sprockets.

Chaincase Problem (continued)	Condition	Remedy
Chain slippage. (continued)	3. Sprocket teeth worn.	3. Install new sprockets and chain.
Chain slips off sprockets.	1. Incorrect chain tension.	1. Check chain tensioner guides and spring.
	2. Sprocket teeth worn.	2. Install new sprockets and chain.
	3. Sprockets misaligned.	3. Align top sprocket with bottom sprocket.

Track Problem	Condition	Remedy
Edge of track is frayed.	1. Track is misaligned.	1. Set track tension and alignment.
	2. Track strikes rivets in tunnel, yet alignment is correct.	2. Remove rivets and install correct type rivet.
Track is grooved (worn) or burnt on inside surface.	1. Track tension is too tight.	1. Set track tension and alignment.
	2. Rear idler wheels do not turn or otherwise damaged.	2. Install new rear idler wheels and set track tension and alignment.
Track ratchets or hits on body tunnel (top).	1. Track tension is too loose.	1. Set track tension and alignment.
Accelerated rail strip wear.	1. Slide rail(s) bent.	1. Straighten slide rail(s) or install new rails.
	2. Badly worn clip that contacts slide rail.	2. Install new rail strip and/or clip.
	3. Track is misaligned.	3. Set track tension and alignment.

Driven Converter Problem	Condition	Remedy
Low engine rpm yet belt shifts completely through driven converter operating range (1 to 1 ratio).	1. Weak spring or broken spring.	1. Rotate end of spring clockwise on driven converter to increase spring tension or install new spring.
High engine rpm yet belt takes too long to shift through driven converter range (1 to 1 ratio).	1. Incorrect spring - too heavy.	1. Install correct spring.
	2. Dirt on movable or stationary sheave.	2. Clean sheaves.
	3. Excessively worn movable or stationary sheave.	3. Install new components.

Electrical Troubleshooting

Ignition Troubleshooting Using CD Ignition Tester P/N T56019-201

GENERAL DESCRIPTION

The Kawasaki Ignition Tester P/N T56019-201 is an electrical energy measuring device capable of measuring the peak energy output of the CDI igniter, magneto exciter, and pulser coils.

Ignition energy output pulses occur at a speed of microsecond duration and cannot be accurately measured by a voltmeter. The Kawasaki Ignition Tester P/N T56019-201 is solid state construction capable of measuring energy peaks of less than one microsecond in duration.

The Kawasaki Ignition Tester P/N T56019-201 performs as a comparator. The energy output values for all CD ignition components were derived from tests conducted by Kawasaki. Using this tester, it can be determined if each ignition component is functioning properly. The test results can be compared with the standard values given.

Tester Controls and Accessories

1. High-Low Range Switch

   The tester has two input ranges selected by a toggle switch. The low range is sensitive to AC or DC voltages from 0.5 to 27 volts. The high range is sensitive to AC or DC voltages from approximately 75 to 500 volts.

High Scale Test:

a. Plug the test simulator into a 115 VAC electric outlet for ten seconds.

b. Place toggle switch of the tester in the High position.

c. Remove the simulator from the outlet, and connect the P and N leads from the tester to the simulator as indicated on the bottom of the simulator.

d. Set the tester dial to 50, or below. Depress the button on the simulator. The indicator lamp on the tester should light.

Low Scale Test:

a. Place switch in low position.

b. Set tester dial to 50, or below.

c. Connect yellow lead to negative terminal of 12 volt battery. Connect red lead to positive terminal. Indicator lamp should light.

If lamp does not light in either the high or low scale tests, check tester battery installation. Check the clip leads for faulty connections. If no faults can be found, refer to the warranty statement for instructions in sending the tester back to Electro-Specialties, Inc. for repair.

2. Indicator Dial and Light

   The ignition energy output is referenced against a 0-100 scale on the tester. The greater the energy output, the greater the value indication on the scale. The indication is in the form of an incandescent lamp that lights when the scale dial is set at the position corresponding to the energy output.

Indicator Dial Alignment:

Check indicator dial alignment by turning the dial to the full clockwise position. The white mark on the dial must line up with the 100 on the face. If the mark does not line up with the 100, loosen the dial setscrew, remove the dial, turn the indicator dial shaft fully clockwise, replace the dial, lining up the mark on the dial with the 100, and tighten the setscrew. Do not force the dial to turn without first loosening the setscrew.

Due to manufacturing tolerances, do not be concerned if the white mark on the dial, when turned fully in the counterclockwise direction, does not align exactly with the zero.

3. Test Simulator

   The test simulator is used as a source of energy for testing the high range of the ignition tester. It is charged up by being plugged into a 115 VAC outlet.

Do not touch the plug pins on the simulator while depressing the button. A mild shock will result. For each test performed by the simulator, it must be recharged. The tester will not be damaged if the test switch is placed in the low position and high voltage output tests are made.

4. Load Coil

   The CD ignition load coil is used in conjunction with the tester and is designed to provide an output load for the CDI igniter unit. The load coil will cause a marginal capacitor to malfunction, but will not effect a good unit.

5. MM-1 Clip

   The MM-1 clip determines the relative amount of energy present in the spark plug wires. Engines in various stages of wear will indicate a different energy reading than new engines. As the engine compression goes down, the energy necessary to fire the plugs goes down also.

   Readings lower than standard indicate low coil output (caused by a fault anywhere in the ignition system, faulty spark plug or ignition wire, or low compression). Readings higher than standard indicate higher coil output or larger than standard spark plug gap.

GENERAL TEST INSTRUCTIONS

Engine Accessory Circuits

Before beginning test procedures, check all primary and secondary ignition wiring, ignition switches, and engine stop switches to eliminate them as possible causes of ignition failure.

Starting With Magneto Ignition

Removal of the spark plugs will allow the engine to turn over faster, raising the level of output from the ignition system. Vigorous cranking raises the output over that of cranking without compression. If output results are marginal, output can be measured with and without compression. Values listed in the test procedures are taken against compression. Always crank vigorously as in actual starting.

Analysis of Test Results

Indicator Lamp Lights at Specified Setting:

After every test that lights the indicator lamp, reset the indicator circuit by depressing the Reset button. The Indicator lamp will light at all points downscale from the highest indication.

Test results should repeat within five points of the specified setting. If readings do not repeat, output of the ignition system is erratic.

Indicator Lamp Does Not Light Unless Dial Is Turned Downscale From Specified Setting:

This indicates that the output is less than that designed to operate the engine in a satisfactory manner. The engine may run at a lower setting, but be subject to hard starting and/or misfiring. Be certain that correct engine cranking conditions were met.

Indicator Lamp Does Not Light:

Output of the system is too low to operate the tester indicator circuit.

Multiple or Intermittent Ignition Problems

In dealing with intermittent ignition problems there is no easy way. Problems that occur only during hot engine operation will have to be tested on a hot engine. In some cases of temperature and/or vibration failure, only parts replacement can solve the problem as most of these failures return to normal at engine shut off.

Low test readings indicate ideal conditions for engine misfire and hard starting.

There is always the possibility of more than one component of the ignition system failing. Careful repeat of the test procedures and troubleshooting of the accessory circuits will uncover any additional problems.

WARNING

Magneto and CDI igniter output voltages are high enough to cause an uncomfortable shock. Always see that clip lead insulators cover the clips so they do not contact the operator or vehicle frame.

CAUTION

Never perform tests on the CDI igniter without the ignition coil or the tester connected to the output connections. This will prevent internal damage to the CDI igniter.

CAUTION

Never connect the tester directly to the coil secondary output (spark plug). Always use the MM-1 clip when testing the ignition coil output.

Preliminary Ignition Troubleshooting Procedures

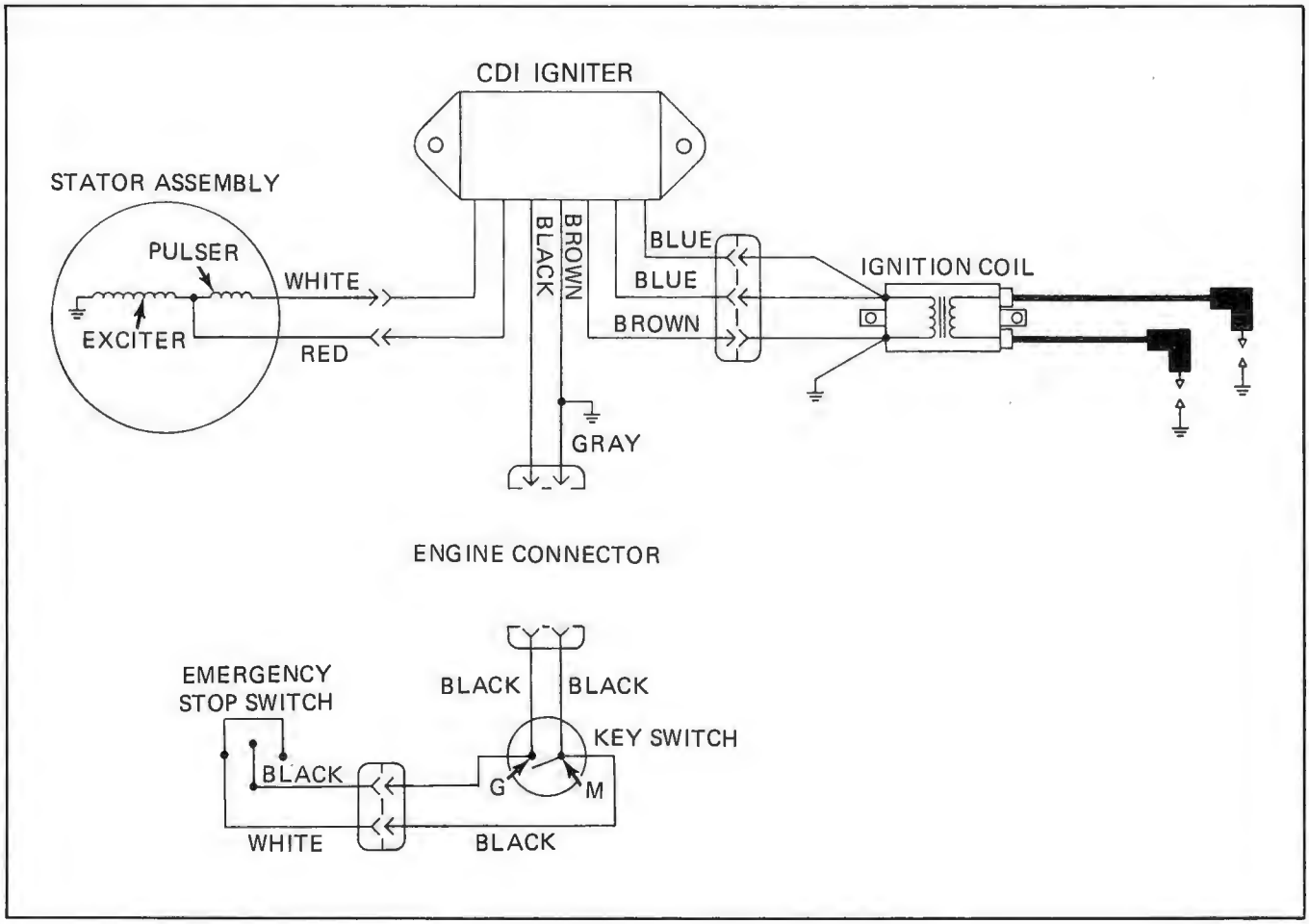

When an ignition problem is present, prior to performing elaborate troubleshooting try to solve your problems by performing the easy tests first.

1. Remove the key switch and emergency stop switch circuits from the system. (See Figure 3-1.) Separate wiring harness connector on the engine.

   a. Start the engine. If the engine runs properly with the connector separated, ignition components on the engine are okay, then it must be the key switch, the emergency stop switch or the wiring. Refer to Key Switch and Emergency Stop Switch Tests.

   b. If the engine ignition problem still exists, test the ignition components mounted on the engine.

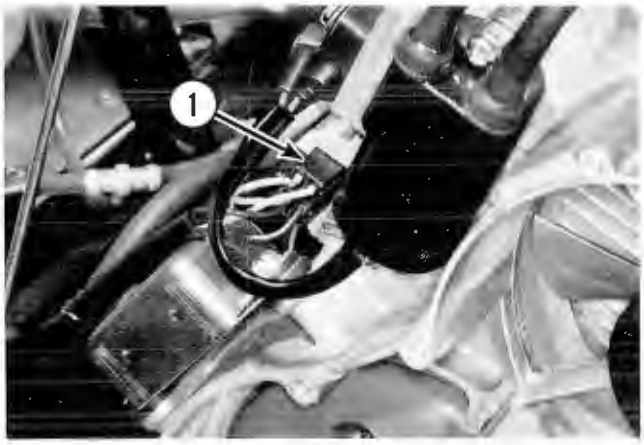

1. Engine Wiring Connector

Figure 3-1

2. Check the condition of the grounded BROWN wire between the ring terminal at the engine connector and the ring terminal on the primary of the ignition coil.

   a. Remove the screw securing each ring terminal to ground.

   b. Set meter to low ohms scale (X1). Connect one ohm meter lead to the ring terminal removed from the ground at the ignition coil. Connect the other ohm meter lead to the ring terminal removed from the ground at the engine connector. (See Figure 3-2.)

   c. If ohmmeter indicates closed circuit (0), BROWN ground wire between the engine connector and the ignition coil is okay.

   d. If ohmmeter indicates open circuit (∞) or high resistance, BROWN ground wire is defective. Check BROWN wire connection at the ring terminals, the three wire connector between CDI igniter and ignition coil. If the wire checks okay, replace the CDI igniter.

The following tips can help you locate your ignition problem.

1. A defective exciter coil, CDI igniter, ignition coil, key switch or emergency stop switch can be the cause of no spark, weak spark or intermittent spark.

2. A defective pulser coil can be the cause of no spark or intermittent spark but not a weak spark.

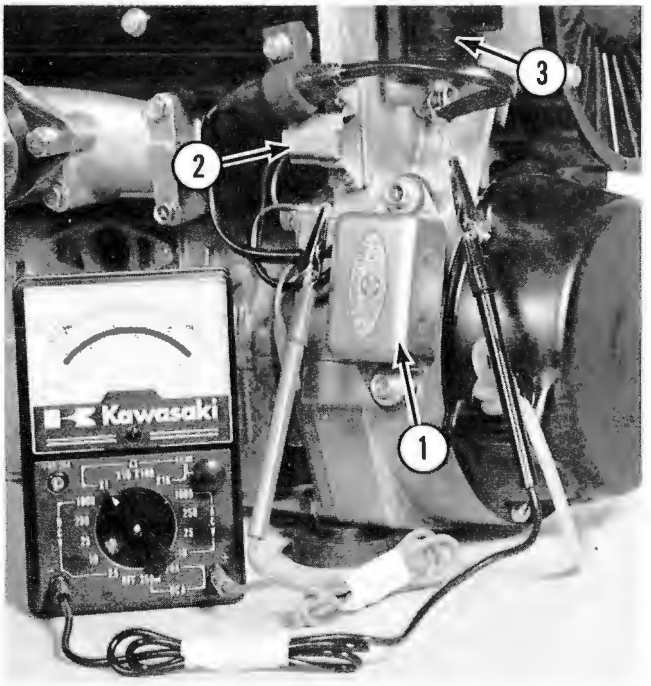

1. CDI Igniter
2. Engine Connector
3. Ignition Coil

Figure 3-2

Test Procedures - Using CD Ignition Tester P/N T56019-201

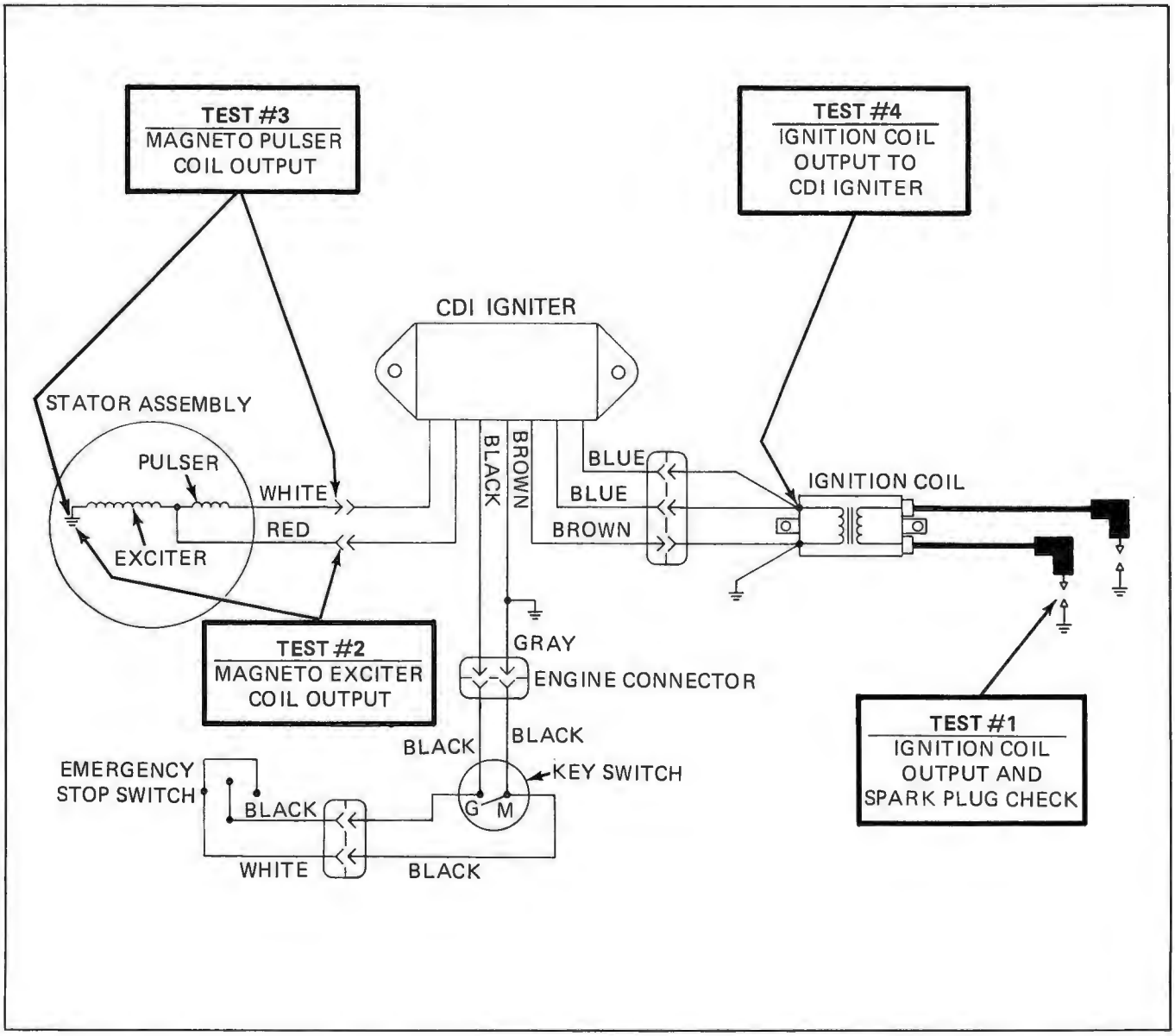

TEST #1		TEST #2		TEST #3		TEST #4	
RANGE	DIAL SETTING	RANGE	DIAL SETTING	RANGE	DIAL SETTING	RANGE	DIAL SETTING
Low	25	High	50	Low	90	High	55

NOTE: Refer to following pages for detailed testing procedures.

Test No. 1

Ignition Coil Output and Spark Plug Check

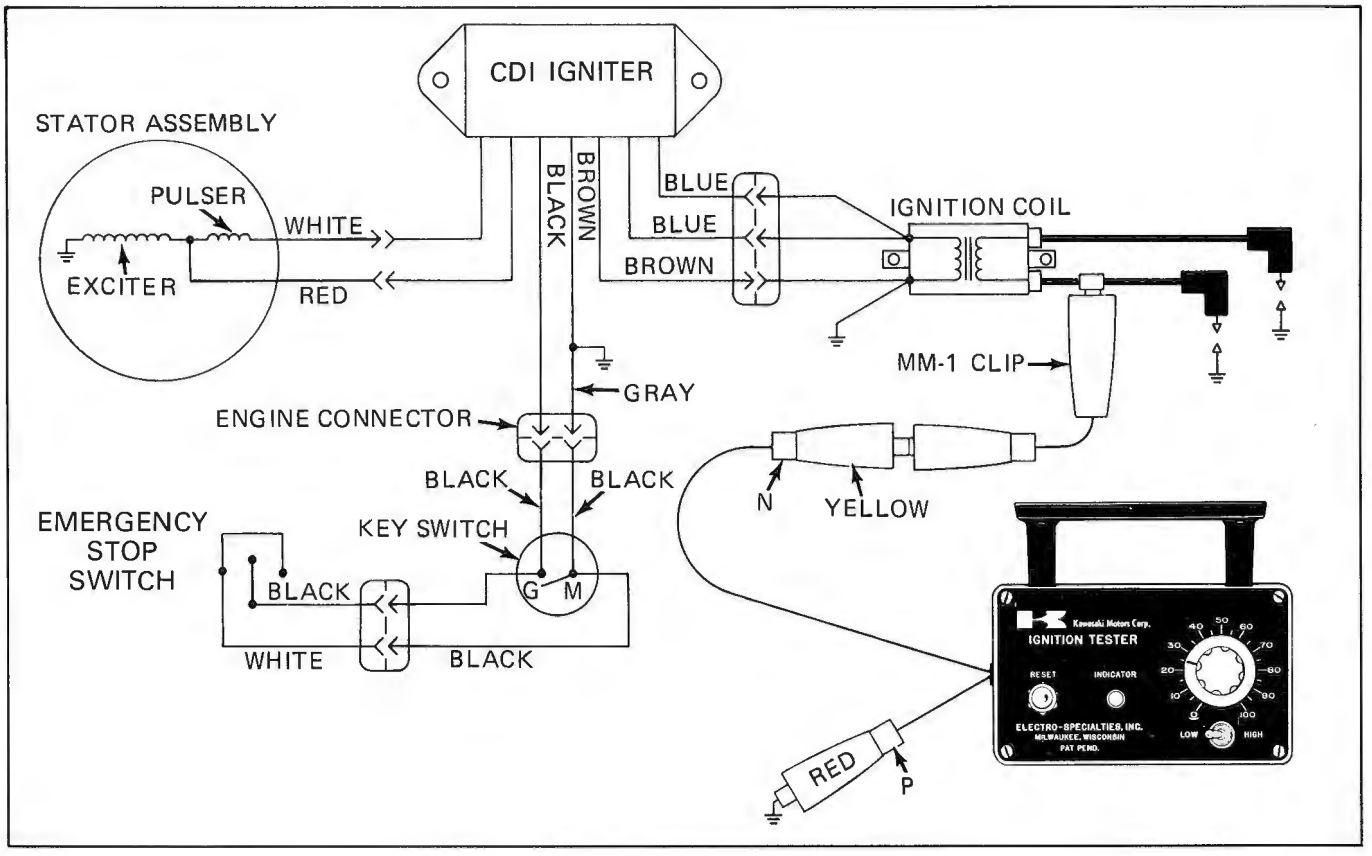

TEST CONNECTIONS

1. Connect the MM-1 adaptor to the tester N (yellow) lead wire.

2. Connect the tester P (red) lead wire to a good ground on the engine.

3. Clamp the MM-1 adaptor around either spark plug wire as close to the spark plug as possible. If insulation sleeving is over the spark plug wire, push the sleeving back so that the clip encircles the spark plug wire directly. Do not allow any metal portion of the MM-1 clip to touch the engine.

4. Before proceeding, be certain that the engine stop switch, ground wires, and all primary and secondary ignition wiring are not contributing to the problem.

TEST PROCEDURE

NOTE: After each test that lights the Indicator Lamp, push the Reset button to turn the lamp off in preparation for the next test.

1. Set the toggle switch to the Low range. Set the tester dial to 25.

2. Pull the recoil starter handle to turn the engine over. If the engine starts, allow it to idle only. Repeat this test three times to verify consistent output.

   a. If the lamp lights consistently at or above 25 on the scale, the ignition system up to the spark plugs is operating properly. Remove the spark plugs and replace any plug which is fouled, bridged, or otherwise unfit for service. Consider the possibilities that high heat, vibration, or moisture may be causing ignition problems and repeat Test No. 1 incorporating these factors into the test.

   b. If the lamp does not light consistently above the specified value or does not light at all, follow the steps on the next page.

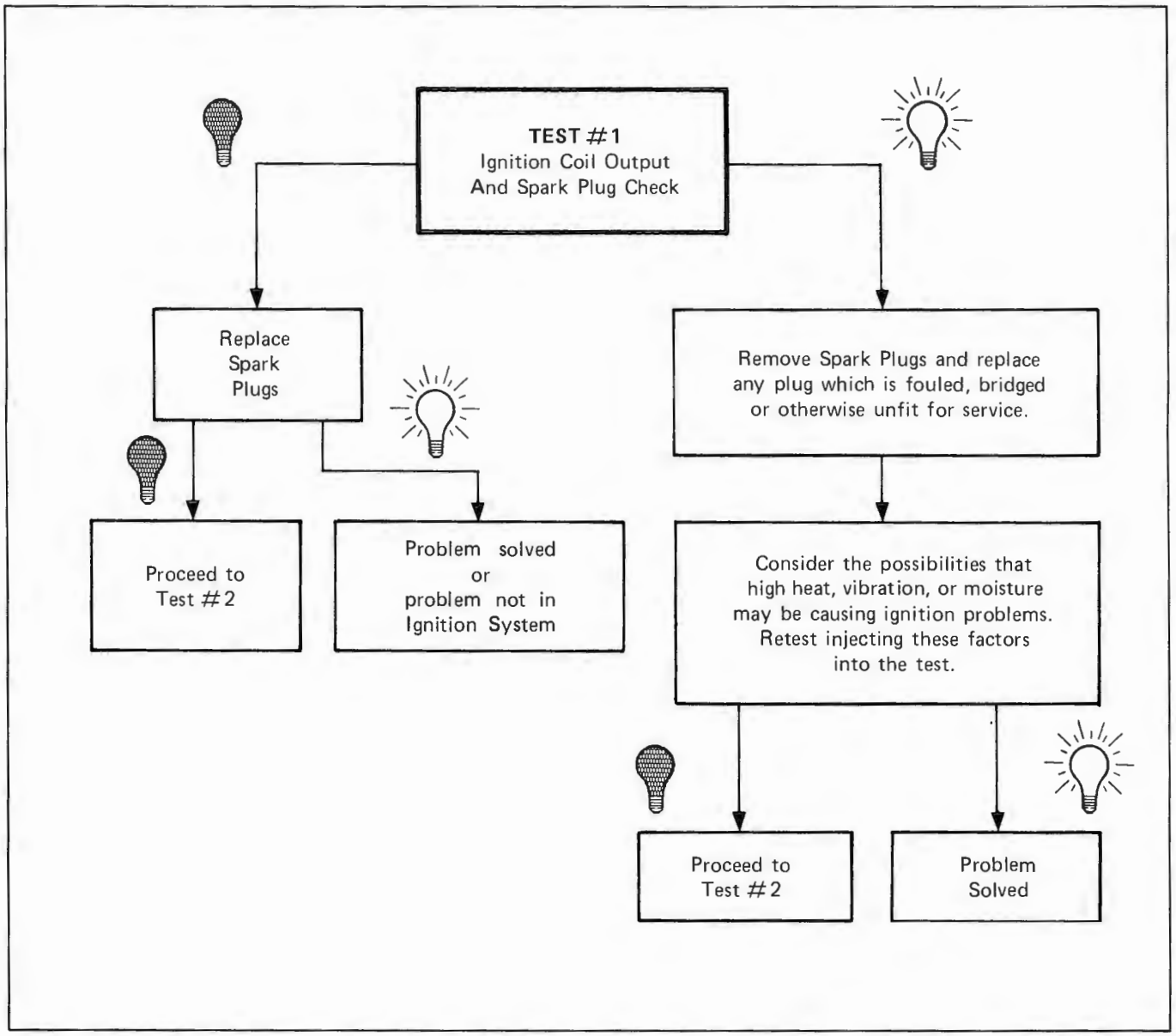


No Lamp or Low/Inconsistent Reading


Lamp Lights at Specified Value

STANDARD VALUE TEST #1

RANGE	VALUE
Low	25

Test No. 2
Magneto Exciter Coil Output

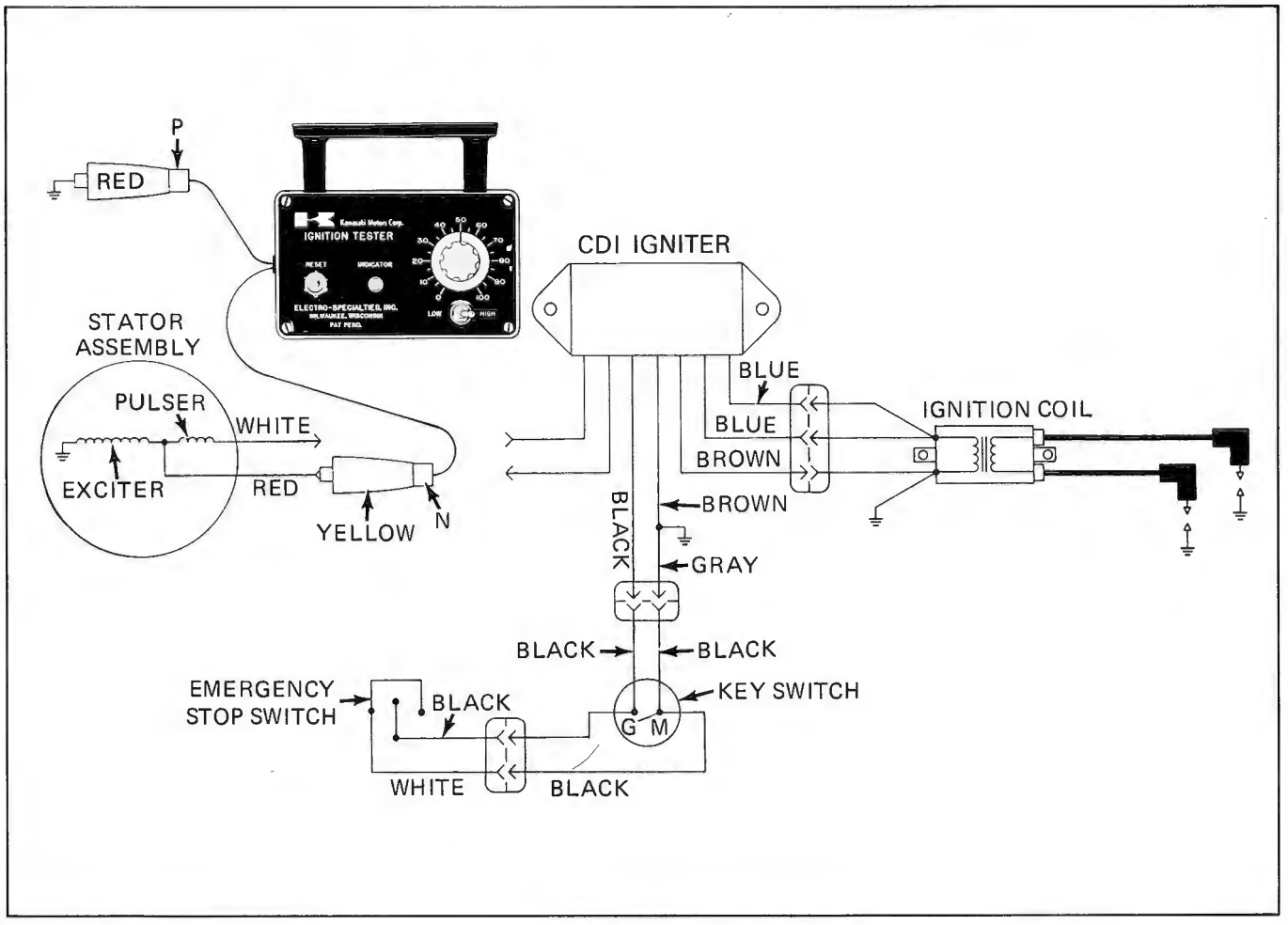

CAUTION

Do not turn over the engine unless either coil or tester is connected to the CDI igniter.

TEST CONNECTIONS

1. Disconnect the red and white wires between the magneto assembly and the CDI igniter.

2. Connect the tester N (yellow) lead wire to the red wire on the magneto end of the connector.

3. Connect the tester P (red) lead wire to a good engine ground.

TEST PROCEDURE

1. Set the toggle switch to the High range. Set the tester dial to 50.

2. Turn over the engine while observing the Indicator Lamp on the tester.

   a. If the lamp lights, push the Reset button to turn the lamp off and repeat Test No. 2 three times. If the lamp lights consistently at 50, magneto exciter coil is good, proceed to Test No. 3.

   b. If the Indicator Lamp gives inconsistent readings at any dial setting or does not light at all, this indicates the following:

   1. A defective exciter coil (check the ohms). Replace the exciter coil.

   2. Defective wiring. Check the wiring.

   3. Defective flywheel magnets. Replace the flywheel assembly.

Follow the steps in the chart on the next page.

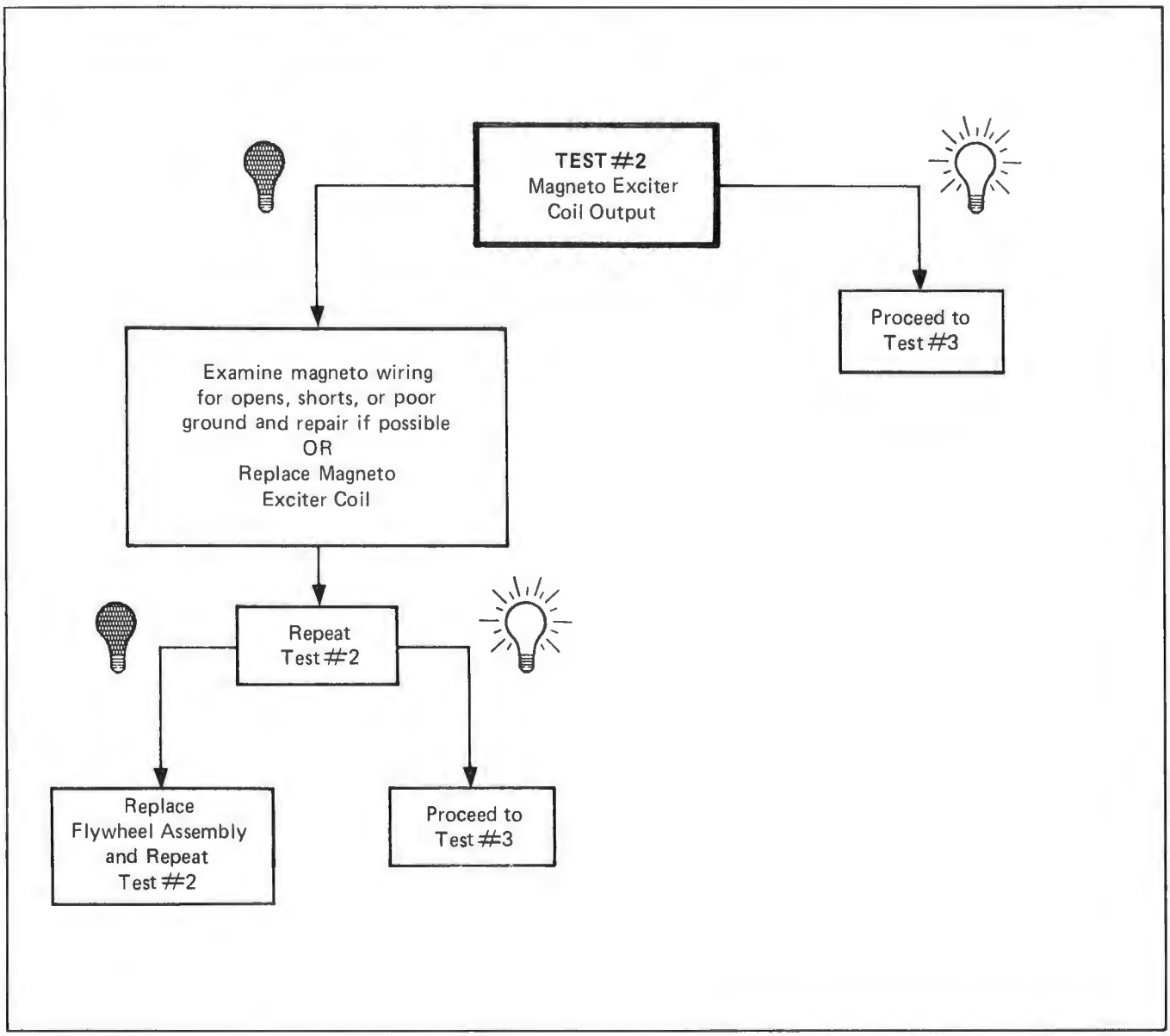

No Lamp or Low/Inconsistent Reading

Lamp Lights at Specified Value

STANDARD VALUE TEST #2

RANGE	VALUE
High	50

Test No. 3
Magneto Pulser Coil Output

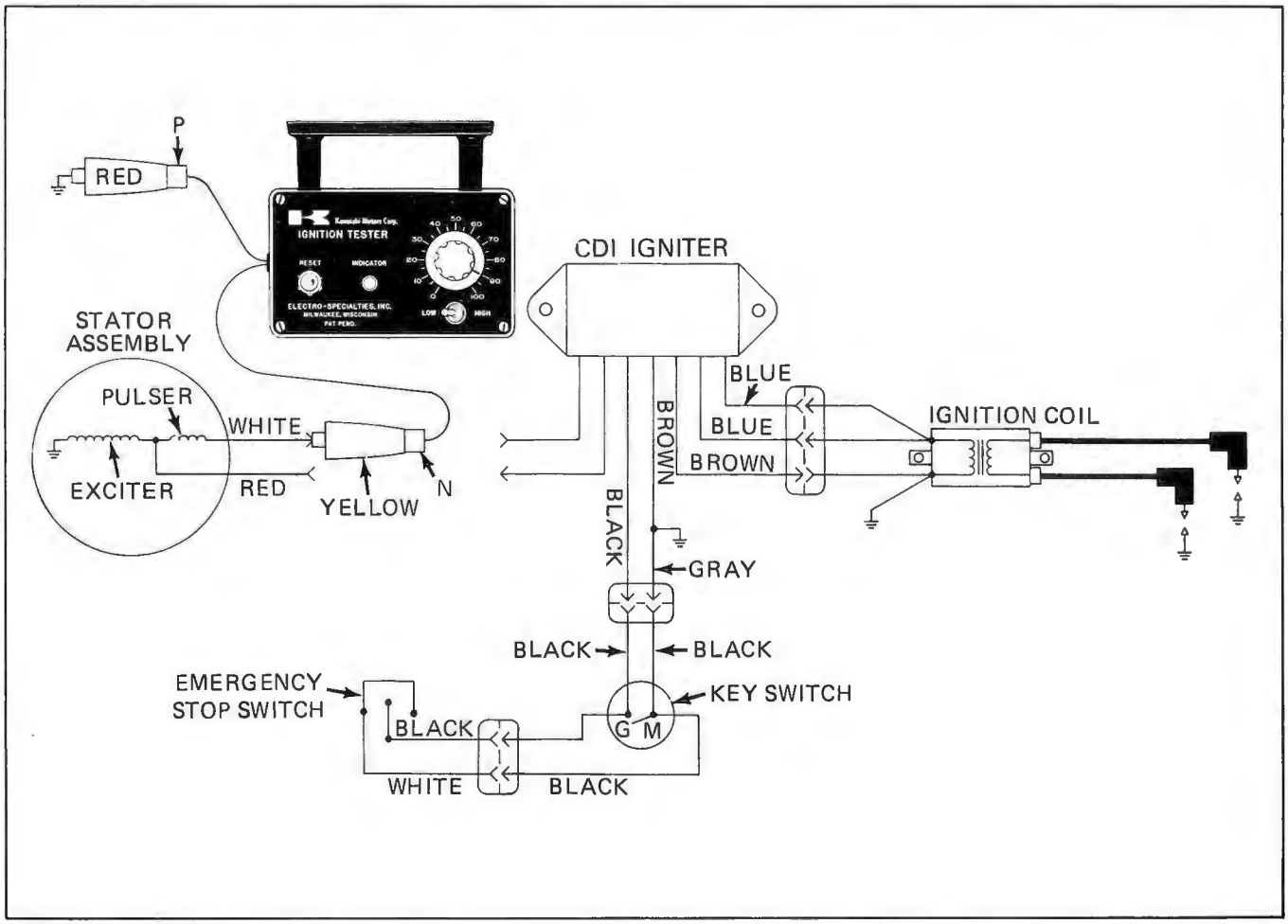

TEST CONNECTIONS

1. With both the red and white wires still disconnected, connect the tester N (yellow) lead wire to the white wire on the magneto end of the connector.

2. Connect the tester P (red) lead wire to a good engine ground.

TEST PROCEDURE

1. Set the toggle switch to the Low range. Set the tester dial to 90.

2. Turn over the engine while observing the Indicator Lamp on the tester.

   a. If the Indicator Lamp lights, push the Reset button to turn the lamp off and repeat Test No. 3 three times. If the lamp lights consistently at 90 the pulser coil is good, proceed to Test No. 4.

   b. If the Indicator Lamp gives inconsistent readings or does not light at all, follow the steps on the next page.

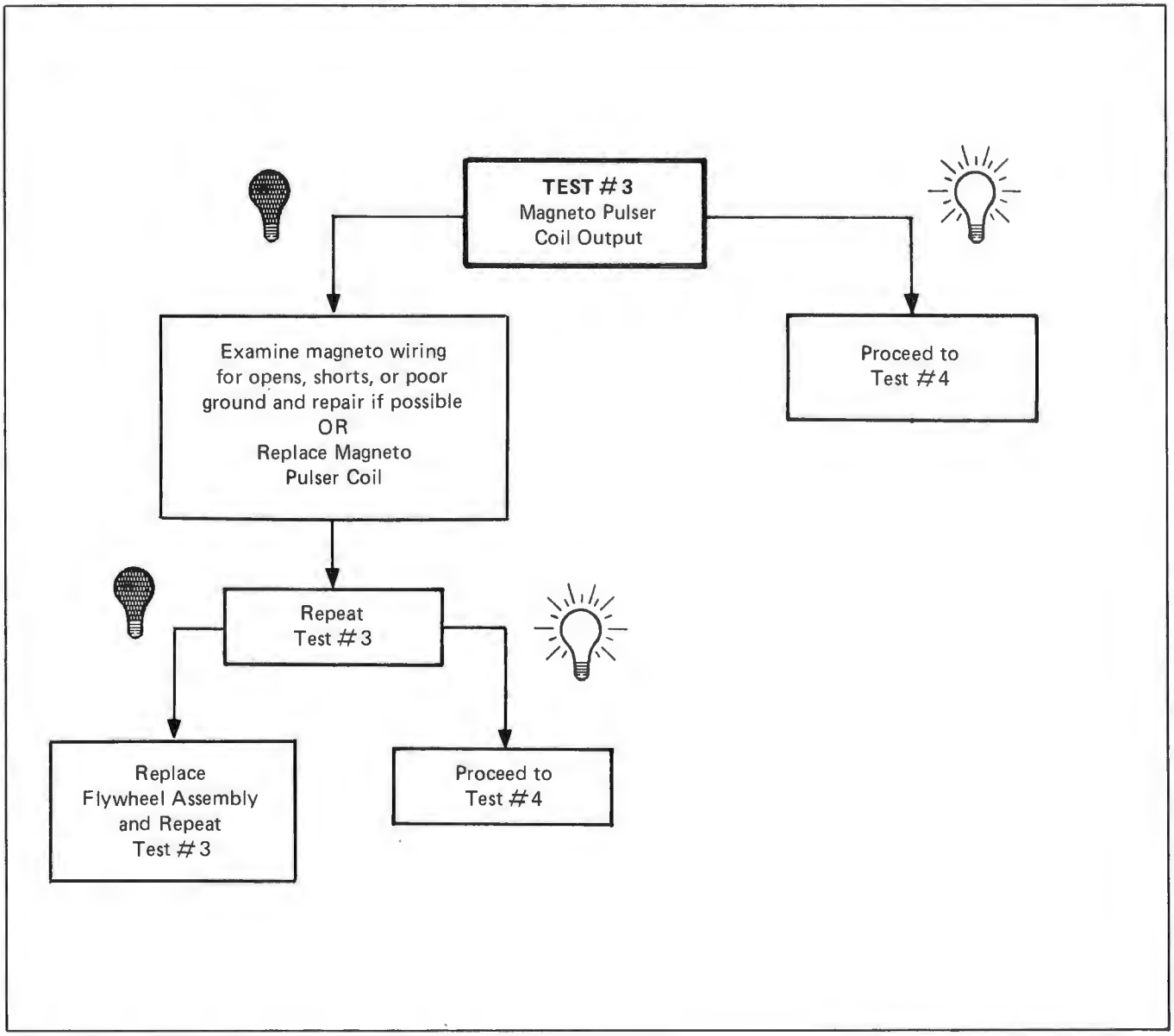

No Lamp or Low/Inconsistent Reading

Lamp Lights at Specified Value

STANDARD VALUE TEST #3

RANGE	VALUE
Low	90

Test No. 4

CDI Igniter Output To Ignition Coil

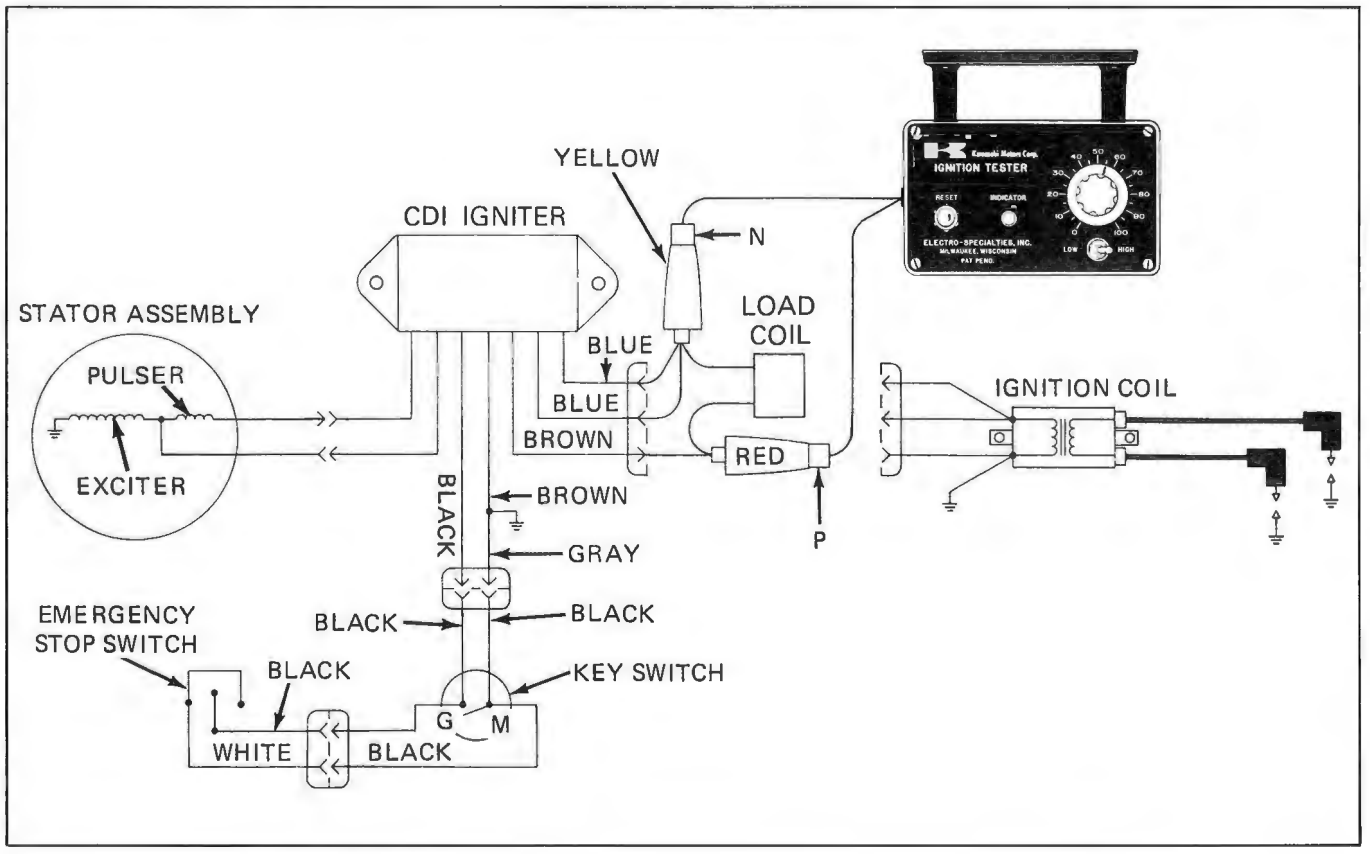

TEST CONNECTIONS

1. Disconnect the three-wire connector between the CDI igniter and the ignition coil.

2. Connect the tester N (yellow) lead to both blue wire terminals in the CDI igniter half of the three-wire connector. Form the test jumper into a loop to aid in this connection.

4. Connect the tester P (red) lead to the brown wire terminal in the CDI igniter half of the three-wire connector.

5. Connect the load coil between the tester P (red) and N (yellow) lead wires.

TEST PROCEDURE

1. Set the toggle switch to the High range. Set the tester dial to 55.

2. Turn over the engine while observing the Indicator Lamp on the tester.

   a. If the Indicator Lamp lights, push the Reset button to turn the lamp off and repeat Test 4 three times. If the lamp lights consistently at 55 the CDI igniter is good. Replace the ignition coil and repeat Test No. 1.

   b. If the Indicator Lamp gives low/inconsistent readings or does not light at all, replace the CDI igniter.

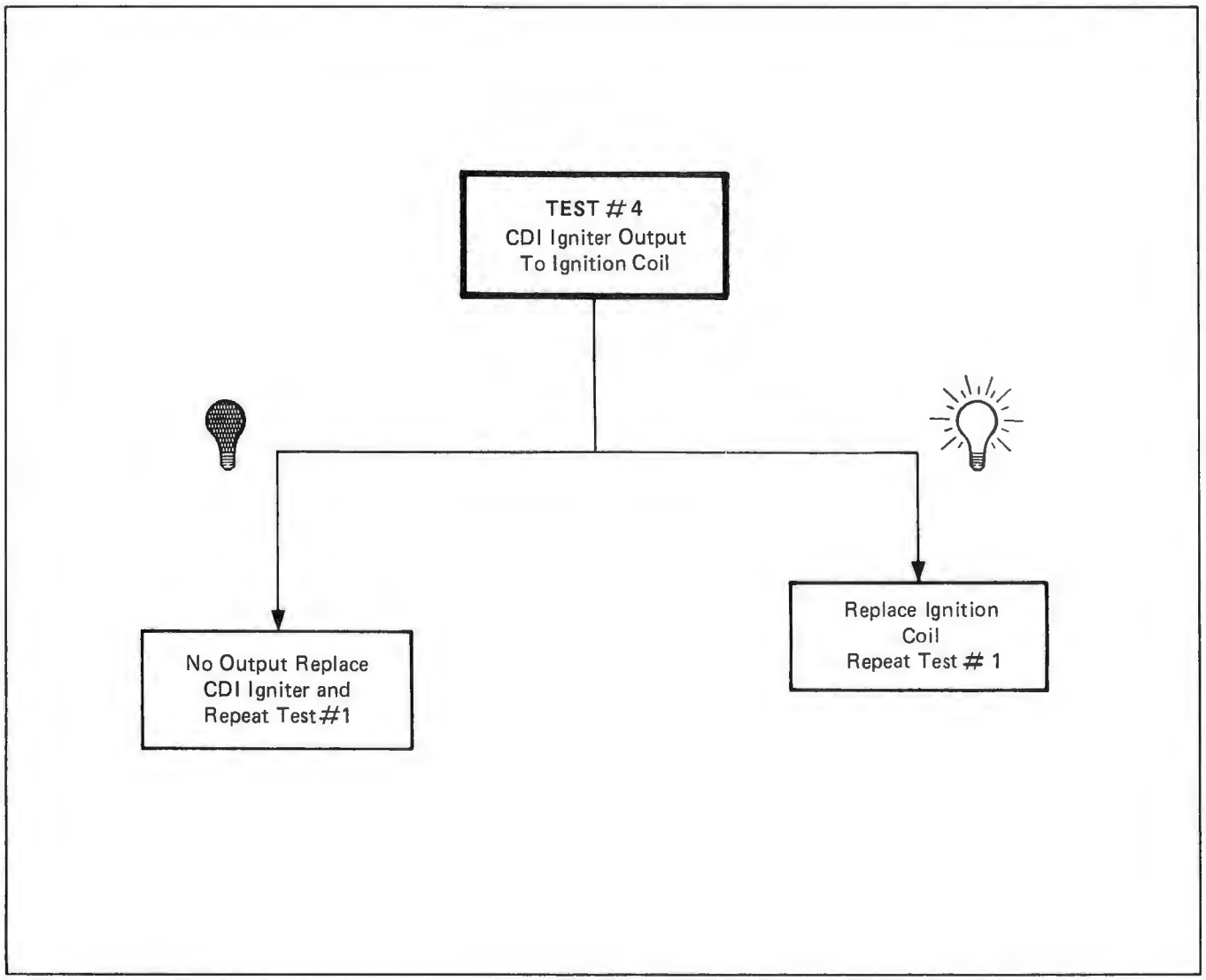

No Lamp or Low/Inconsistent Reading

Lamp Lights at Specified Value

STANDARD VALUE TEST #4

RANGE	VALUE
High	55

Ignition Troubleshooting Using an Ohmmeter

GENERAL DESCRIPTION

The following test procedures are alternate checks designed for locating ignition system malfunction using an ohmmeter.

If the Kawasaki CD ignition tester is not available, the exciter coil, pulser coil and ignition coil may be checked using an ohmmeter. This type of test is not as accurate or sophisticated as using the Kawasaki CDI tester and the results are not 100% conclusive. Resistance and AC Voltage readings that meet the specified value in the chart indicate that the coil should operate okay. AC Voltage tests are performed with the spark plug installed and cranking the engine with normal starting effort.

Observe the following notes when performing the troubleshooting procedures.

NOTE: Use the flywheel puller (special tool) to remove the flywheel. Never attempt to remove using a hammer. The flywheel or crankshaft will be damaged.

NOTE: Exercise care to prevent an electrical shock from the CDI igniter. Handle the CDI igniter carefully. If you should drop it, the incorporated electronic components will be damaged.

The troubleshooting table lists ignition problems and possible conditions which would cause them. To determine whether the magneto or ignition coils are defective, check the resistance readings values listed on the following page. If the resistance readings obtained are not within the range given in the tables, the component is defective and must be replaced.

1. CHECKING CDI WIRING CONNECTIONS

   The wiring between the magneto, CDI igniter, and ignition coil uses couplers to prevent any wrong connection. All wiring connections must be done accurately. Only wires of like colors should be connected together by the couplers.

CDI WIRING CONNECTIONS

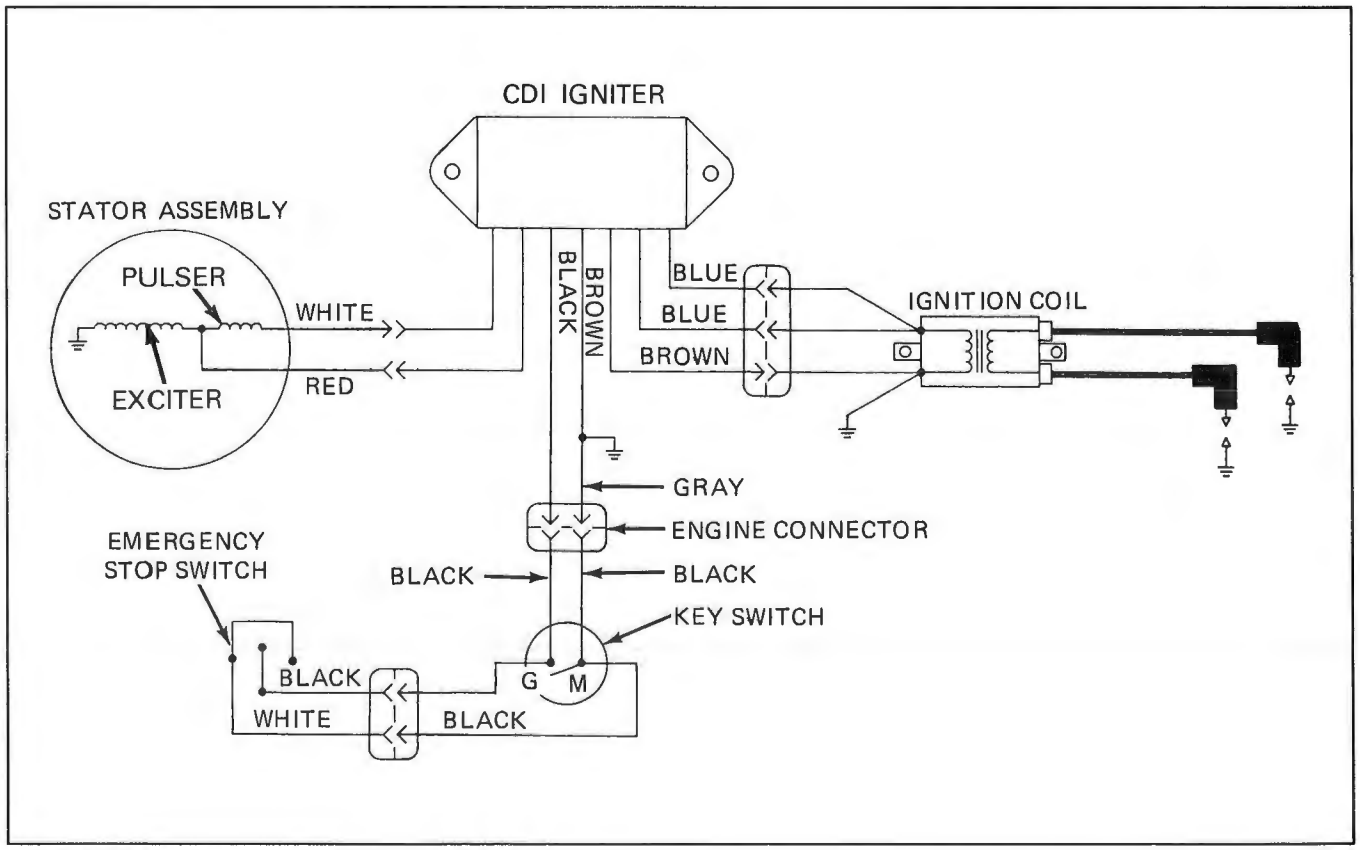

2. CHECKING THE MAGNETO AND IGNITION COIL

Do not use an improper tester (insulation resistance testers or other testers with a battery of large capacity).

The use of a large capacity tester may ruin the CD igniter.

To locate the cause of trouble (broken coil, short circuit, etc.) measure the resistance of each coil winding.

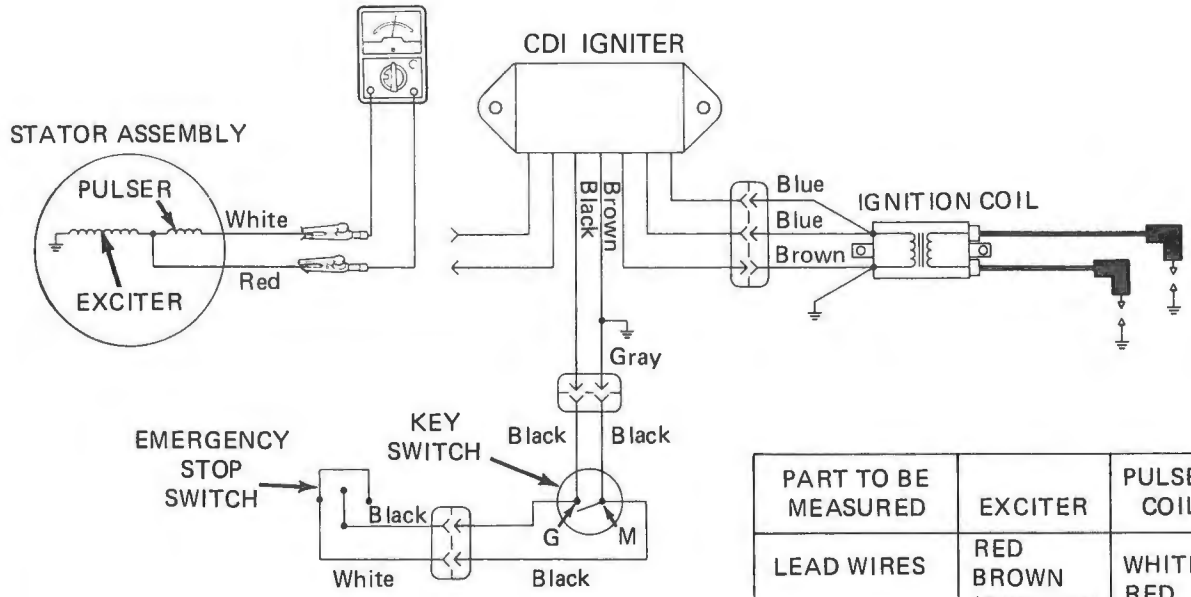

PART TO BE MEASURED	EXCITER	PULSER COIL
LEAD WIRES	RED BROWN (GROUND)	WHITE-RED
RESISTANCE Ω	128 Ω ±20%	23Ω±20%
*VOLTAGE AC	40 VAC	4 VAC

* Measure at cranking speed with spark plugs installed.

3. CHECKING THE IGNITION COIL

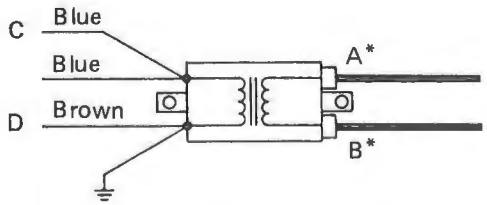

PARTS TO BE MEASURED	PRIMARY WINDING BLUE (C) - Ground (D)	SECONDARY WINDING A–B*
RESISTANCE**	0.37Ω±20%	10.2KΩ±20%

*With spark plug caps removed.
**Defective coils cannot always be detected using this test alone. Use of coil tester which simulates operating condition is the most reliable test method.

4. SPARK PLUG CAP

Unscrew the spark plug cap from the high tension wire and test for 5,000 Ω ± 20% resistance between the terminals at each end of the cap. (See Figure 3-3.)

Figure 3-3

Ignition Troubleshooting

Problem	Condition	Remedy
No spark is produced	1. Defective exciter coil	1. Replace exciter coil
	2. Defective pulser coil	2. Replace pulser coil
	3. Defective ignition coil primary winding	3. Replace ignition coil
	4. Defective ignition coil secondary winding	4. Replace ignition coil
	5. Defective CDI igniter	5. Replace CDI igniter
	6. Spark plug is shorted - resistance between electrodes should be 1 M Ω or more	6. Replace spark plug
	7. Wrong wire connections	7. Connect wires correctly
The engine starts but will not pick up speed	1. Defective exciter coil	1. Replace exciter coil.
	2. Defective pulser coil	2. Replace pulser coil
	3. Improper timing	3. Adjust timing
	4. Defective CDI igniter	4. Replace CDI igniter
	5. Shorted spark plugs. Resistance between electrodes should read 1 M Ω or more	5. Replace spark plugs
The engine is cranked again but will not start	1. Defective exciter coil	1. Replace exciter coil
	2. Defective pulser coil	2. Replace pulser coil
The engine tends to kick back	1. Defective CDI igniter	1. Replace CDI igniter

Key Switch and Emergency Stop Switch Test, Including Associated Circuits

WARNING

Indexing tab on connector must face upward for proper electrical polarity. Improper indexing may damage wiring harness or cause electrical sparks in the engine compartment.

1. Disconnect the black plug from engine to P.C. board.

2. Turn the key and emergency stop switches on. on.

3. Connect ohmmeter leads to the two pins on P.C. board that engine connector was plugged into (ohms X 1 scale).

4. If the ohmmeter registers infinity, there is an open circuit and the switches should be good. (To verify, activate key switch, meter should read 0. Turn on key switch and activate emergency stop switch, meter should read 0.)

   Be sure to turn both switches on before proceeding.

5. If the reading is 0 or very low, keep ohmmeter connected to P.C. board and proceed to steps 6 and 7 below.

6. Disconnect emergency stop switch connector from P.C. board. If ohmmeter reads infinity, replace emergency stop switch, if not plug connector back into P.C. board and proceed to step 7.

7. Disconnect key switch connector (white) from P.C. board. If ohmmeter reads 0, replace P.C. board. If ohmmeter reads infinity, plug connector back into P.C. board and disconnect black connector from back of key switch. If ohmmeter reads infinity, replace key switch. If ohmmeter reads 0, replace wiring from P.C. board to key switch.

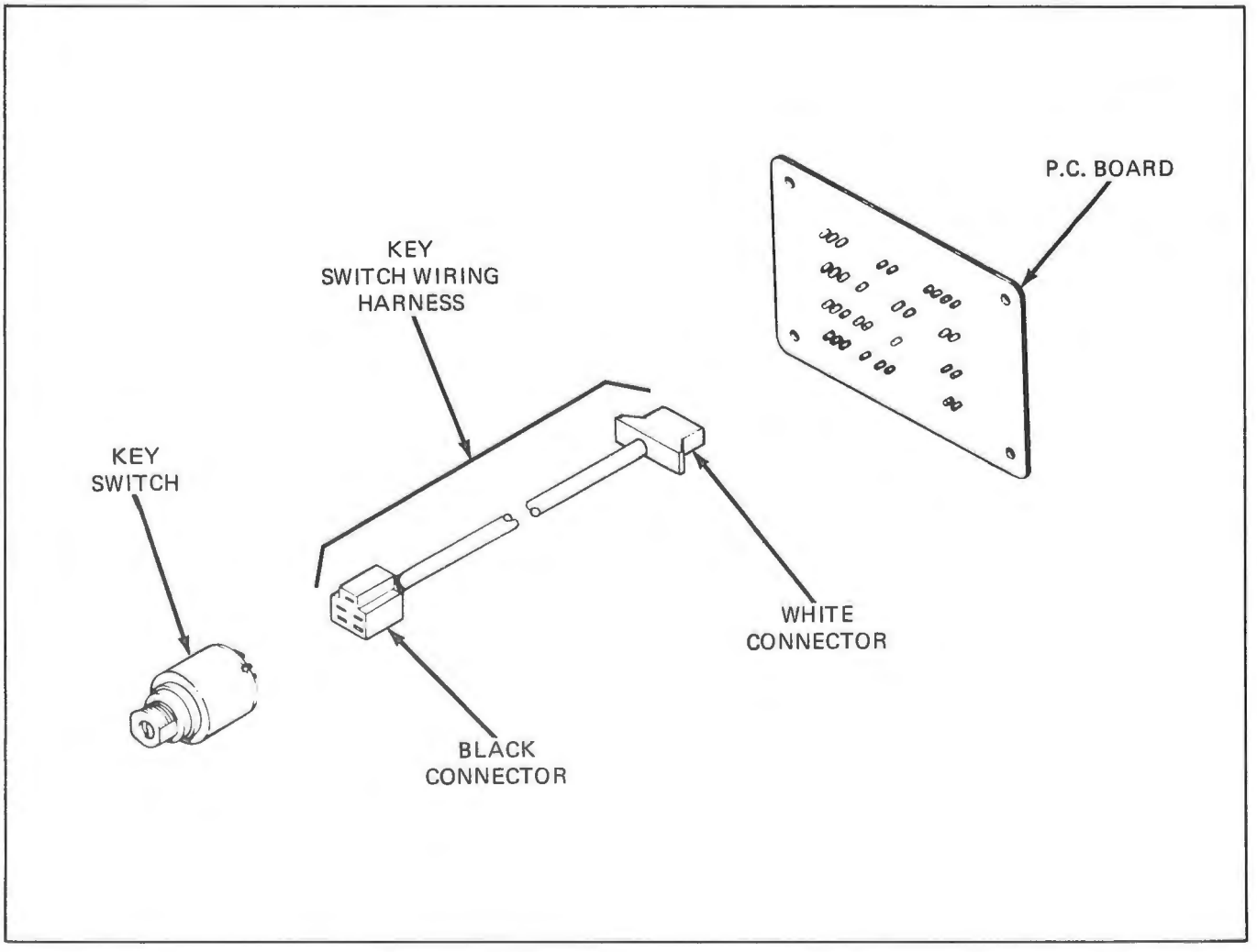

Magneto Alternator and Light Regulator Tests

These tests should be conducted if bulbs burn out consistently or all the lights are extremely dim. (Filaments barely light.) Bulbs which fail due to overvoltage usually have melted filaments rather than broken ones.

1. Raise the rear of the snowmobile. Make sure the track is free to rotate.

WARNING

While raising the snowmobile off the ground, place the skis against a stationary object, and be sure the vehicle is properly secured, to prevent personal injury.

2. Connect multitester leads at engine (white) connector on PC board. DO NOT DISCONNECT FROM PC BOARD. Hook one lead to the yellow wire and the other to the black or brown wire.

3. Set multitester at 25 VAC.

4. Set key switch in ON position (lights off). Do not activate brake light during test.

CAUTION

Excessive voltage may exist during test 4 and 5 which may burn out bulbs if lights are turned on.

5. Start the engine. DO NOT RUN OVER 2000 RPM. The voltmeter should read 8-11 VAC. If the voltage reads 8-11 V, the magneto and voltage regulator are probably okay. If it reads less than 8-11 V, proceed to No. 6. If it reads higher, the voltage regulator is probably open and is not working. To be sure, increase RPM slowly. DO NOT EXCEED 3000 RPM. If the voltage reading did not stabalize or exceeded 22 V, the regulator should be replaced. (Before replacing make sure connector on regulator is in good condition and case is properly grounded to chassis.)

6. With engine still running disconnect voltage regulator from PC board (single yellow wire). When voltage regulator is disconnected the voltage reading should increase to 14-20 V. DO NOT RUN OVER 2000 RPM. If it does not, the problem is in the magneto lighting coil or wiring to lighting coil from PC board. If voltage does increase the regulator is most likely shorted and should be replaced.

Headlight and Headlight Circuit Test

Before proceeding with these tests, be sure magneto alternator and voltage regulator are working properly.

1. Check to see if headlight bulb filaments are good.

   a. Disconnect headlight connector.

   b. Connect one lead of the ohmmeter to the ground terminal of the headlight.

   c. Connect the other ohmmeter lead to the high beam terminal.

   d. Set ohmmeter scale to ohms X 1.

   e. If ohmmeter reads infinity or more than 2 ohms the filament is faulty.

   f. Test the low beam in the same way by moving the ohmmeter lead from the high beam filament to the low beam.

   g. If headlight malfunction still exists, proceed.

2. Check to see if voltage is present at headlight connector.

   a. Raise the rear of the snowmobile. Make sure the track is free to rotate.

WARNING

While raising the snowmobile off the ground, place the skis against a stationary object, and be sure the vehicle is properly secured, to prevent personal injury.

   b. Run engine at 2000 RPM.

   c. Set voltmeter to 25 Volts AC.

   d. Check for voltage between black and brown wire (low beam) and black and green wire (high beam). Be sure light switch is turned on and dimmer switch is set to proper beam, either high or low.

   e. If voltage is not present at either high or low beam, check headlight harness for good connection to P.C. board, and check for burned or shorted wires in headlight harness. If harness is good, proceed to tests for the dimmer switch and light switch. If taillights, etc. work proceed to the dimmer switch test before the light switch test.

Light Circuit Test

1. Disconnect light switch connector from P.C. board.
2. Connect ohmmeter between red and blue leads using ohms X 1 scale.
3. Turn key switch on.
4. Ohmmeter should read 0. If it reads infinity key switch or wiring from P.C. board to key switch could be faulty.
5. Disconnect wiring from key switch.
6. Connect ohmmeter between B and L terminals.
7. Turn key switch on.
8. Ohmmeter should read 0. If it does not key switch is faulty. If it reads 0 and the reading in step 4 was infinity, the problem is in the wiring from the P.C. board to the key switch.
9. If 0 was obtained in steps 4 and 8 above and the output from the magneto alternator and voltage regulator is okay, and there are no lights, (headlights, tail, brake, etc) the problem is in the P.C. board circuitry. The board should be removed and inspected or replaced.

Dimmer Switch Test

1. Disconnect black dimmer switch connector from P.C. board.
2. Connect ohmmeter to brown and orange wires to dimmer switch (ohms X 1).
3. Turn dimmer switch to low, meter should read 0.
4. Turn dimmer switch to high, meter should read infinity.
5. Connect ohmmeter to brown and green wires to dimmer switch.
6. Turn dimmer switch to high, meter should read 0.
7. Turn dimmer switch to low, meter should read infinity.
8. If any of the tests in steps 3, 4, 6, or 7 were faulty, replace the dimmer switch.
9. If all above tests were okay and there is no headlight power, and the headlight circuit, magneto alternator, voltage regulator, and key switch tests were okay the problem is in the P.C. board. The board should be removed and inspected or replaced.

Stop and Tail Light

1. Check stop taillight bulb before testing and make sure it is making a good connection in socket housing.
2. Disconnect tail lamp (green) connector from P.C. board.
3. To check wiring to taillight connect ohmmeter between the brown lead and black lead (ohms X 1). Ohmmeter should read 2 - 3 ohms.
4. To check wiring to stop light, connect ohmmeter between the green and black wires in the connector (ohms X 1 scale). Ohmmeter should read 1 - 2 ohms.
5. If the readings in steps 3 and 4 read higher than specified or read infinity the problem is in the wiring to the tail stop light. Remove seat and inspect wiring to taillight. (Check bulb contacts again.)
6. If reading in step 3 was okay and the taillight, headlight, and instrument lights do not function proceed to the tests for the magneto alternator voltage regulator and key switch tests. If only the taillight does not function the problem is in the P.C. board. Remove and inspect P.C. board or replace.
7. If reading in step 4 was okay proceed to the test for the brake light switch.
8. If the brake light switch tests okay and the other lights function okay the problem is in the P.C. board. Remove and inspect P.C. board or replace.

Brake Switch Test

Before proceeding with this test make sure brake lever is adjuted so it makes good contact with brake switch.

1. Disconnect brake switch from the P.C. board.
2. Connect ohmmeter between the yellow and blue wires to the brake light switch (ohms X 1 scale).
3. The ohmmeter should read infinity (open).
4. Squeeze the brake lever. The ohmmeter should read 0.
5. If the readings in steps 3 and 4 are not obtained, replace the brake light switch.

FLOW CHART
DISASSEMBLY - ENGINE INSTALLED

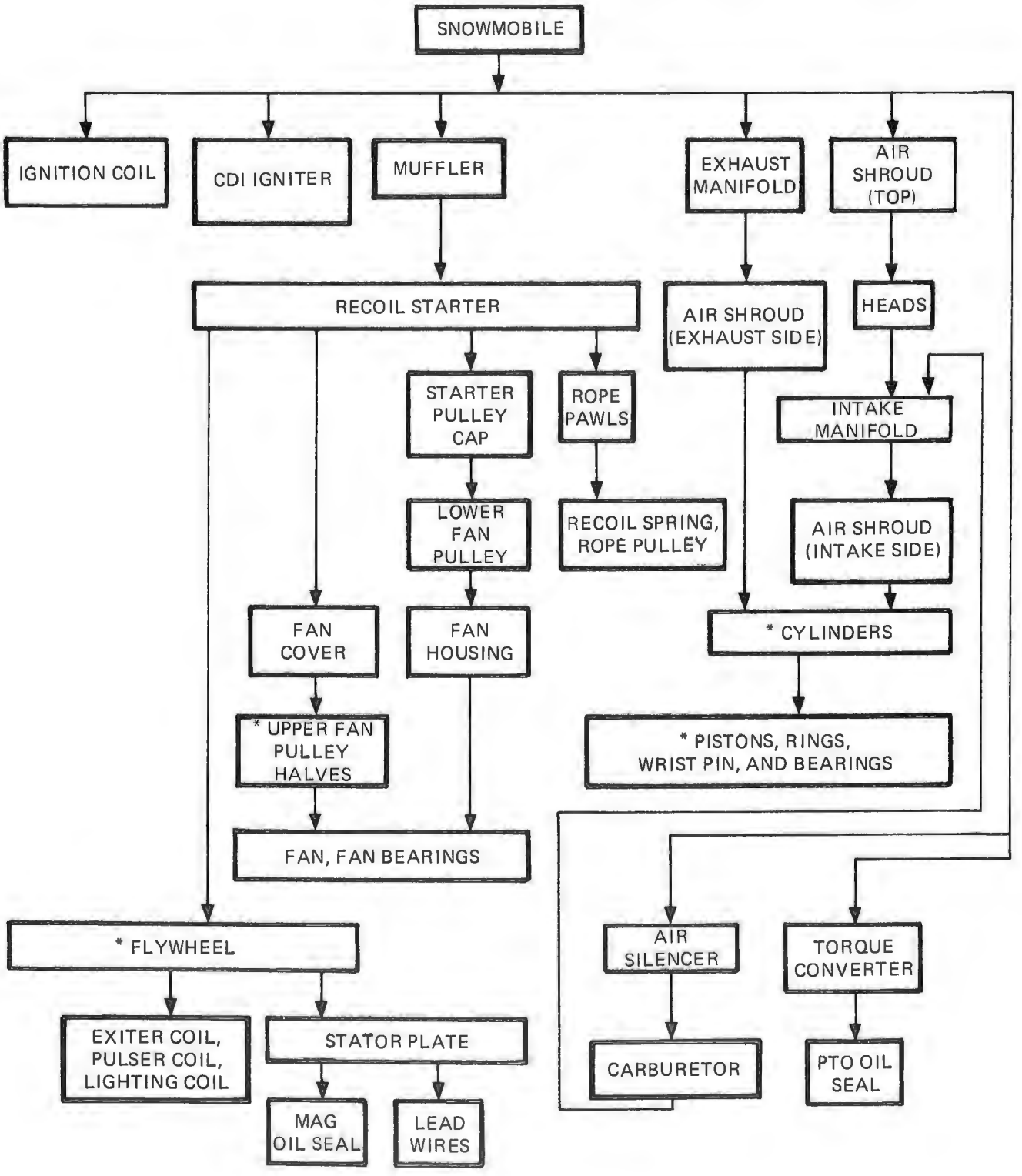

* Removal, installation, disassembly, or assembly requires use of special tool(s).

NOTE:
This chart is designed to aid in determining proper removal sequence. Select the component you wish to remove and follow the arrows leading to that point on the chart.

FLOW CHART
ENGINE REMOVAL

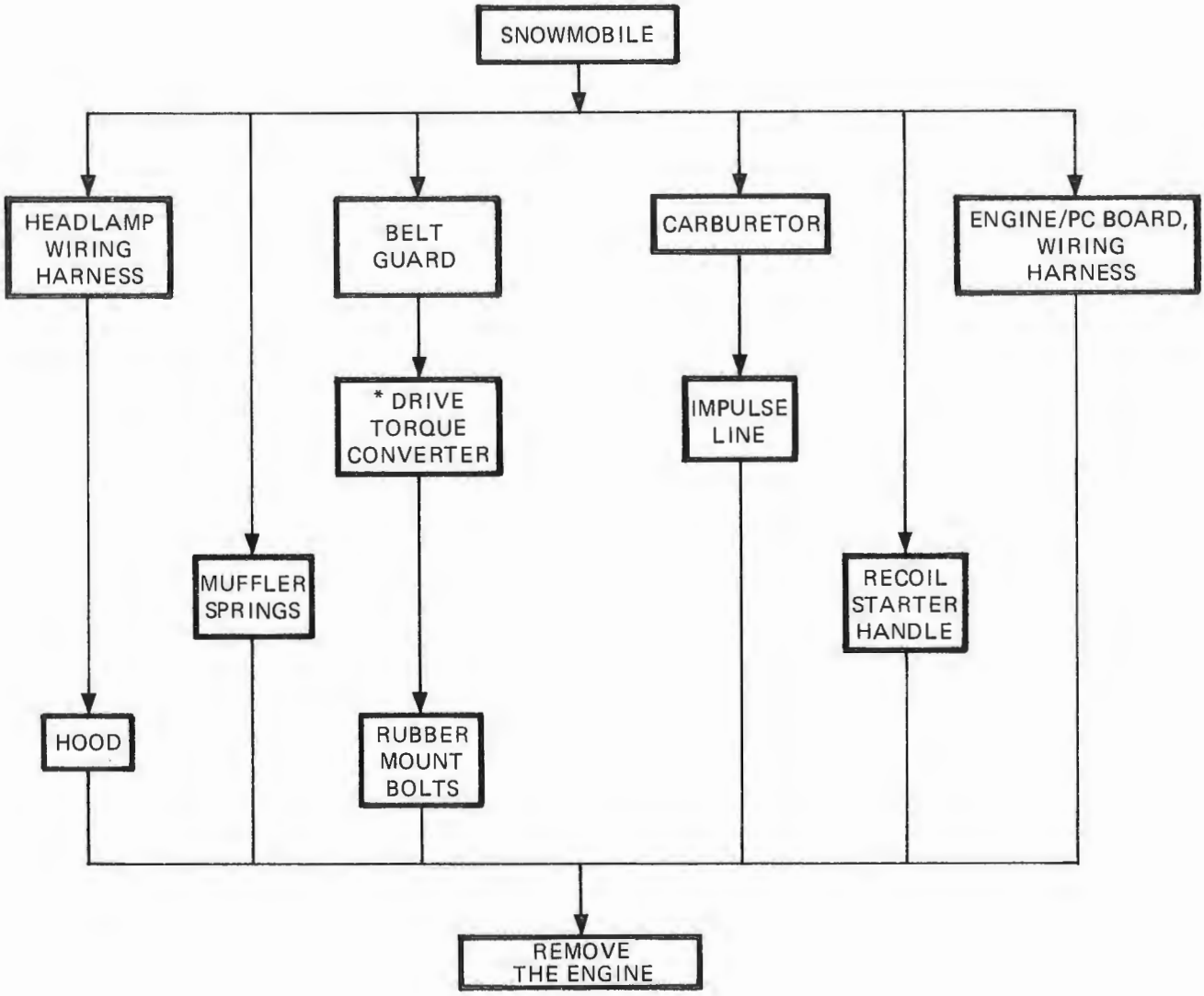

* Removal, installation, disassembly, or assembly requires use of special tool(s).

NOTE:
This chart is designed to aid in determining proper removal sequence. Select the component you wish to remove and follow the arrows leading to that point on the chart.

FLOW CHART
DISASSEMBLY - ENGINE REMOVED

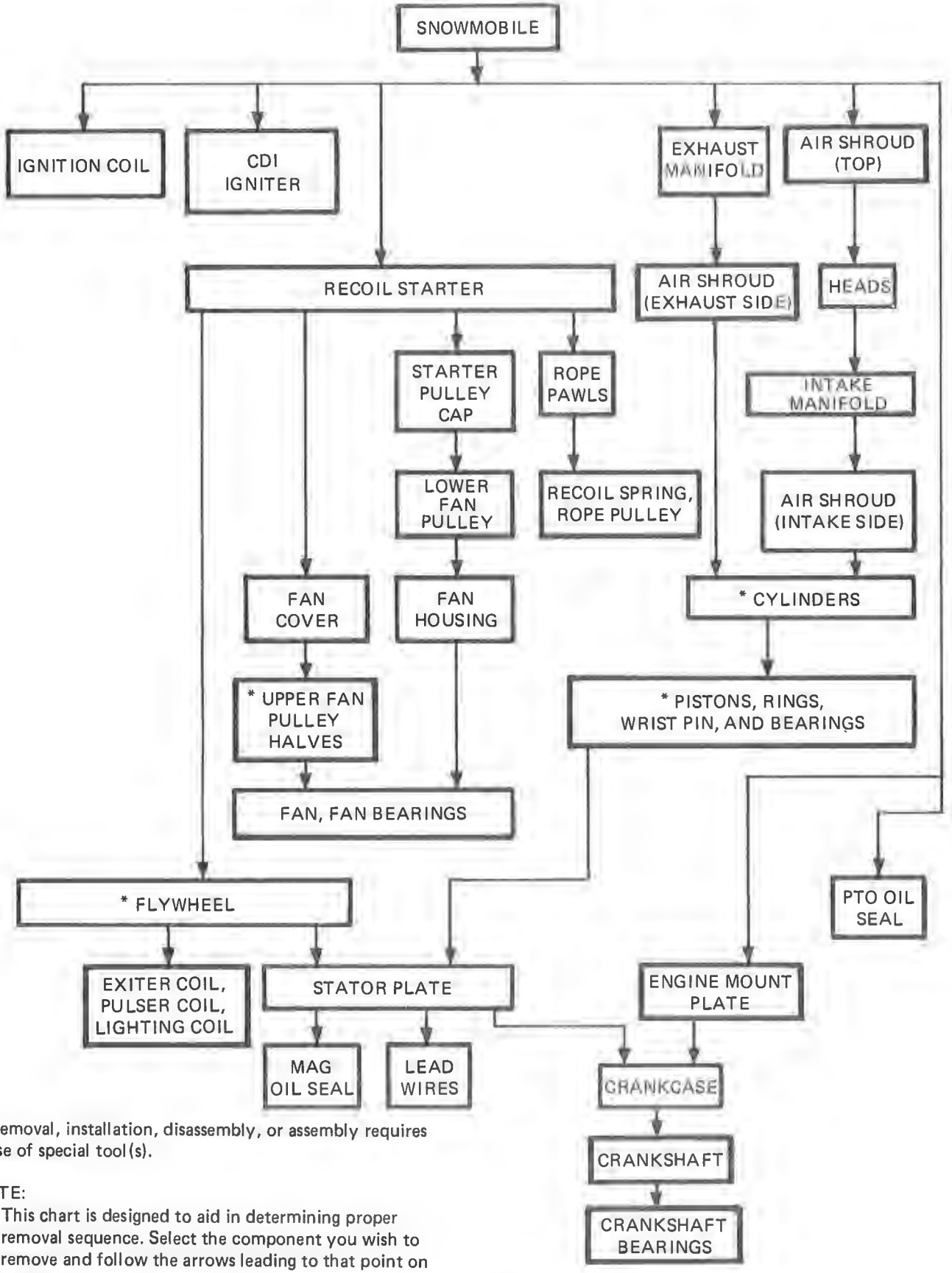

* Removal, installation, disassembly, or assembly requires use of special tool(s).

NOTE:
This chart is designed to aid in determining proper removal sequence. Select the component you wish to remove and follow the arrows leading to that point on the chart.

Muffler

Removal

1. Remove the air intake silencer.
2. Remove two springs which secure the muffler to the exhaust manifold.
3. Remove two nuts and washers which secure the muffler to the mounting brackets.
4. Remove the muffler from the snowmobile, carefully separating from the exhaust manifold. (See Figure 3-4.)

Installation

Install the muffler by reversing the removal procedure. Make sure the muffler is properly seated on the rubber mounts.

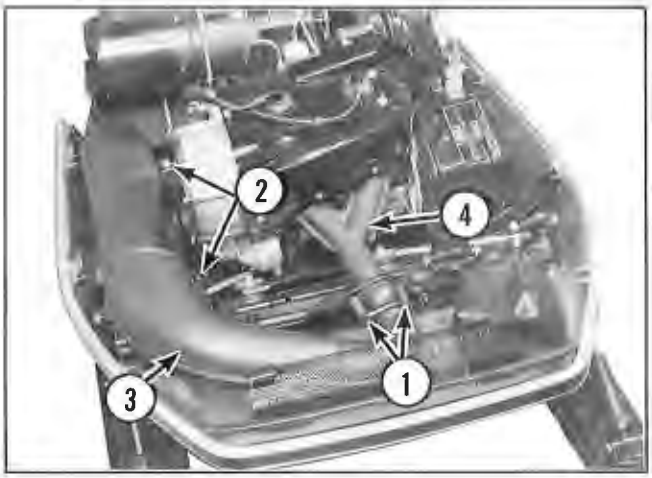

1. Spring
2. Nut and Washer
3. Muffler
4. Exhaust Manifold

Figure 3-4

Air Intake Silencer

Removal

Disconnect the springs. Remove the air intake silencer by pulling the silencer and seal from the carburetor. Remove the air intake silencer from the snowmobile. (See Figure 3-5.)

Installation

Install the air intake silencer by reversing the removal procedure.

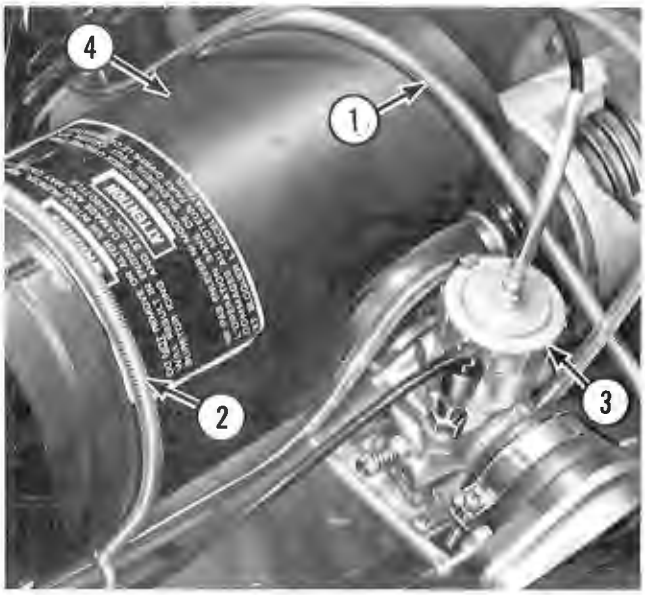

1. Spring
2. Spring
3. Carburetor
4. Air Intake Silencer

Figure 3-5

Carburetor

Removal

1. Remove air intake silencer.
2. Remove the carburetor fuel supply and primer line. Plug the fuel line opening. (See Figure 3-6).

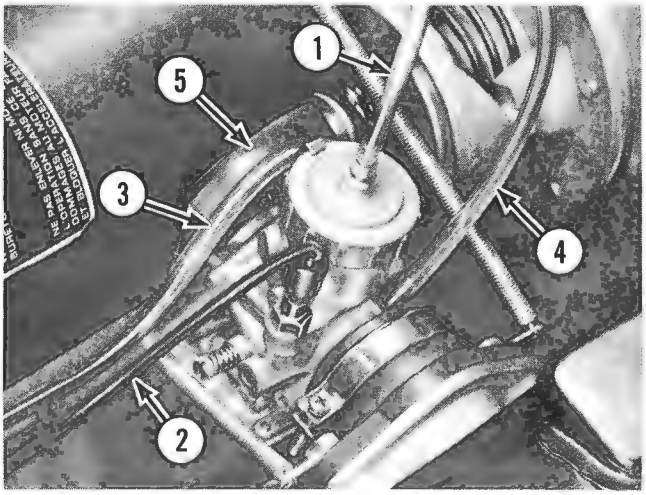

1. Throttle Cable
2. Enrichener Cable
3. Fuel Supply Line
4. Primer Line
5. Silencer/Carburetor Seal

Figure 3-6

3. Unscrew the mixing body top assembly and pull out the throttle slide valve. (See Figure 3-7.)

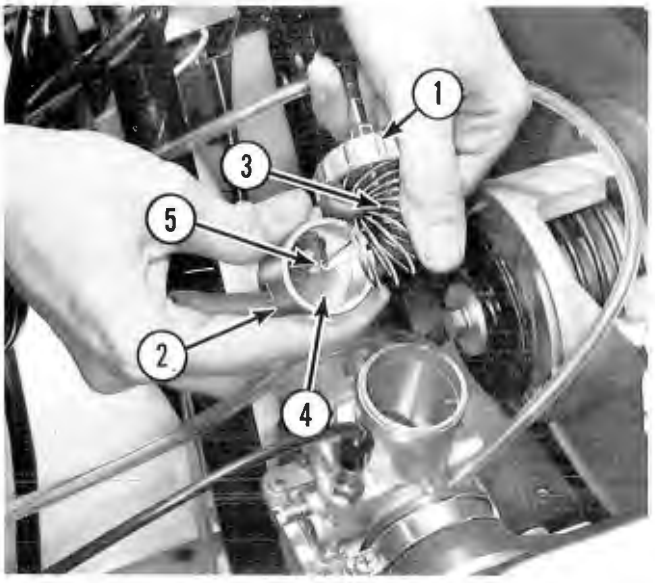

1. Mixing Body Top Assembly
2. Throttle Slide Valve
3. Throttle Spring
4. Spring Seat Plate
5. Jet Needle

Figure 3-7

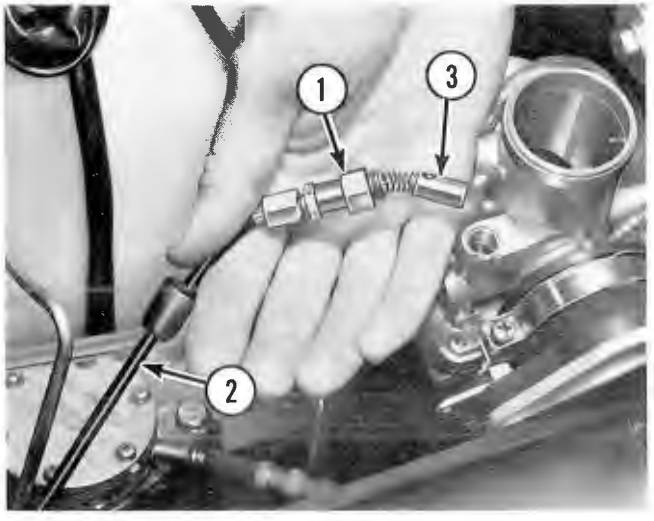

1. Enrichener Plunger Cap
2. Enrichener Cable
3. Enrichener Plunger

Figure 3-8

4. Compress the throttle spring and pull the spring from its seat. Slip the throttle cable through the slot in the spring seat plate. Remove the spring, spring seat plate, and jet needle from the throttle slide valve.

5. Unscrew the enrichener plunger cap and remove the enrichener plunger to release the enrichener cable. Unscrew the fitting and disconnect the enrichener cable. (See Figure 3-8.)

6. Loosen the screw on the carburetor holder clamp and remove the carburetor from the engine.

Disassembly of Carburetor

1. Select a clean work area for disassembling the carburetor. Most carburetor problems are caused by dirt in the system.

2. Clean the carburetor with fuel and blow dry with compressed air before disassembling. Do not blow high pressure air through the carburetor until it is disassembled.

3. Remove four screws with washers and separate the float chamber body from the upper carburetor body. Remove the gasket. (See Figure 3-9.)

4. To remove the main jet, unscrew from the upper carburetor body. Remove jet washer.

5. Push out the float arm pin and remove the float arm. Remove the float valve assembly and place in a secure location to prevent damage.

6. To remove the needle jet, use a soft rod (such as a pencil) to push the needle jet up through its bore.

7. Remove the pilot jet by unscrewing with a thin-bladed screwdriver.

8. Remove the throttle stop screw, spring, pilot air adjusting screw and spring.

Reassembly of Carburetor

Check carburetor parts for proper identification markings prior to reassembly. If the correct components are not installed the carburetor cannot be calibrated properly.

1. Throttle Slide Valve - 2.0CA
2. Needle - 6DH7
3. Needle Jet - 166Q-0
4. Pilot Jet - No. 20
5. Main Jet - No. 270
6. Carburetor Body - 34-179

1. Place the spring on the throttle stop screw and install in the carburetor body. (See Figure 3-9.) Turn in the screw about 10 turns.

2. Insert the spring and pilot air adjusting screw in the carburetor body. Turn the screw all the way in then turn out 1-1/2 turns for initial adjustment.

3. Install the float valve assembly and tighten 25 to 30 in. lb.

4. Install the float arm and secure with float arm pin. Be sure the pin is securely seated.

5. Invert the carburetor and check the alignment between the float arm and the base of the carburetor. The float arm must be parallel to the base.

6. Install the needle jet down through the top of the carburetor. Hold the needle jet in place while installing the jet washer and main jet.

7. Install the pilot jet. Do not overtighten.

8. Position the floats on float chamber pins. Install the floats with the brass pins at the bottom. Secure plastic caps on top of float chamber pins.

9. Position a new gasket on the carburetor body. Place the carburetor body on the float chamber body. Hold the carburetor body and float bowl together and invert the carburetor. Check for proper alignment of the two castings. Secure with the four screws with washers.

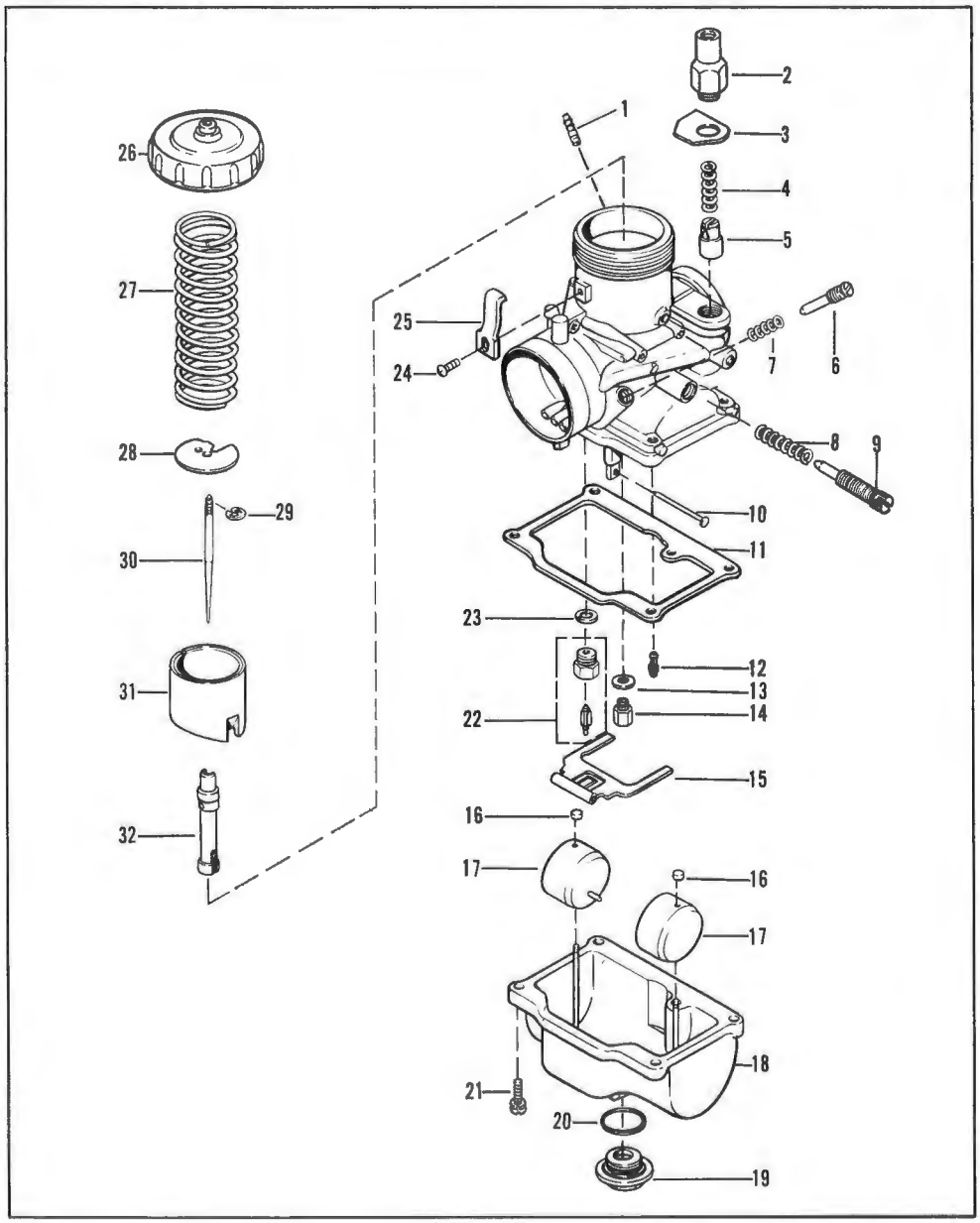

1. Primer Tube Fitting
2. Starter Plunger Cap
3. Washer
4. Spring
5. Starter Plunger
6. Pilot Air Adjusting Screw
7. Spring
8. Spring
9. Throttle Stop Screw
10. Pin
11. Gasket
12. Pilot Jet
13. Washer
14. Main Jet
15. Float Valve Assemblt
16. Cap
17. Float
18. Float Chamber Body
19. Drain Screw
20. O-Ring
21. Screw
22. Float Valve Assembly
23. Washer
24. Screw
25. Plate
26. Cap
27. Spring
28. Plate
29. Clip
30. Needle Jet
31. Throttle Slide Valve
32. Needle Jet

CARBURETOR

Figure 3-9

Installation Of Carburetor

1. Install the carburetor to the intake manifold.

2. Screw the mixing body top assembly to the throttle cable.

3. Insert the jet needle into the throttle slide valve.

4. Hold the throttle cable and mixing body top assembly in one hand. Place the spring in the top and compress the spring so the throttle cable extends beyond the spring.

5. Guide the throttle slide valve over the throttle cable. Insert the end of the cable through the hole in the throttle slide valve slot.

6. While keeping the spring compressed, release the throttle slide valve and install the spring seat plate. Then release the spring.

7. Install the throttle slide valve into the carburetor so the slot in the throttle slide valve mates with the locating pin inside the throttle slide valve bore. Install the mixing body top assembly and tighten finger tight. Tighten the throttle cable locknut.

8. Slide the enrichener plunger cap, washer and spring over the end of the enrichener cable. (See Figure 3-5.)

9. Place the hole in the enrichener plunger over the cable end and spring. Insert the plunger into the carburetor body and tighten the enrichener plunger cap. Bend washer plate against cap.

10. Connect the fuel supply line, primer line, and the air intake silencer. (See Figure 3-6.)

11. Raise the rear of the snowmobile off the ground. Start the engine and perform the carburetor adjustments in Section 2 of this manual.

Troubleshooting

Carburetor related malfunctions can be identified as too rich or too lean a fuel mixture. Symptoms are as follows:

When the fuel/air mixture is too rich:

1. Engine noise is dull and intermittent.

2. The condition grows worse when the engine is hot.

3. The condition grows worse when the enrichener (choke) is opened.

4. The condition may improve slightly when the air silencer is removed.

5. Exhaust gases are heavy.

6. Spark plugs become fouled.

When fuel/air mixture is too lean,

1. The engine becomes overheated.

2. The condition improves when enrichener is opened or the primer pump is operated.

3. Acceleration is poor.

4. Spark plugs burn.

5. The revolutions of the engine fluctuate and lack of power is noticed.

If a carburetor is experiencing too rich or too lean fuel mixture problems, first check to see that the throttle is working properly. Then disassemble and clean the carburetor. A rich or lean fuel mixture is usually caused by a clogged air or fuel passage. If cleaning does not improve carburetor performance, carburetor tuning may be necessary.

Tuning

Different fuel metering components function according to the throttle setting:

1. Pilot Air Screw - from closed throttle to one half throttle opening.

2. Throttle Valve Cutaway - from closed to one half throttle opening.

3. Jet Needle and Needle Jet - one eighth to seven eighths throttle opening.

4. Main Jet - one quarter to full throttle opening.

Tuning enables adjustment of the fuel/air mixture at any throttle setting by replacing the standard fuel metering devices with parts designed to meter more or less fuel than standard. Because a change in one fuel metering system can affect the performance of other systems, all systems should be checked whenever a change is made to one fuel metering system.

The pilot air screw regulates air that mixes with fuel from the pilot jet. Turning the pilot air screw in richens the fuel/air mixture. Turning out leans the mixture. The pilot air screw should be normally

positioned 1/2 to 2 turns from full in. Less than 1/2 turn indicates the pilot jet is too small. More than two turns out indicates the pilot jet is too large.

The jet needle system can be tuned by changing the position of the clip on the jet needle. There are five grooves at the top of the needle. The grooves are numbered 1 through 5 from top to bottom. The clip is normally installed in the No. 3 groove. Moving the clip to a higher position on the needle leans out the fuel/air mixture. Moving the clip to a lower position richens the fuel/air mixture.

Fuel Pump

Removal

1. Remove air intake silencer from carburetor.
2. Remove fuel inlet line from fuel pump. Plug end of fuel line. (See Figure 3-10.)
3. Remove fuel outlet line and impulse line from fuel pump.
4. Remove two fuel pump mounting bolts.

Disassembly

1. Remove four retainer screws. (See Figure 3-11.)
2. Lift off body cover gasket and diaphragm. Note the position of gasket in relation to body cover.
3. Grommets cannot be reinstalled. Be sure to have replacements before removing them. Remove grommets and check valves from main body.

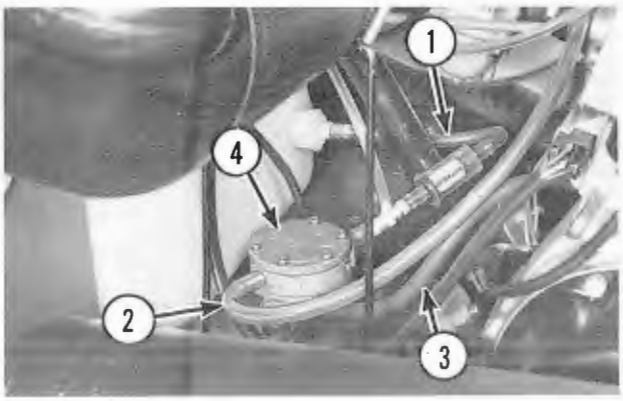

1. Fuel Inlet Line
2. Fuel Outlet Line
3. Impulse Line
4. Fuel Pump

Figure 3-10

Cleaning

Clean body castings with a mild solvent. (See Figure 3-11.)

CAUTION

Do not clean rubber diaphragms with solvent. Damage to diaphragms will occur.

Be sure fuel line and impulse line fittings are clear of any obstructions.

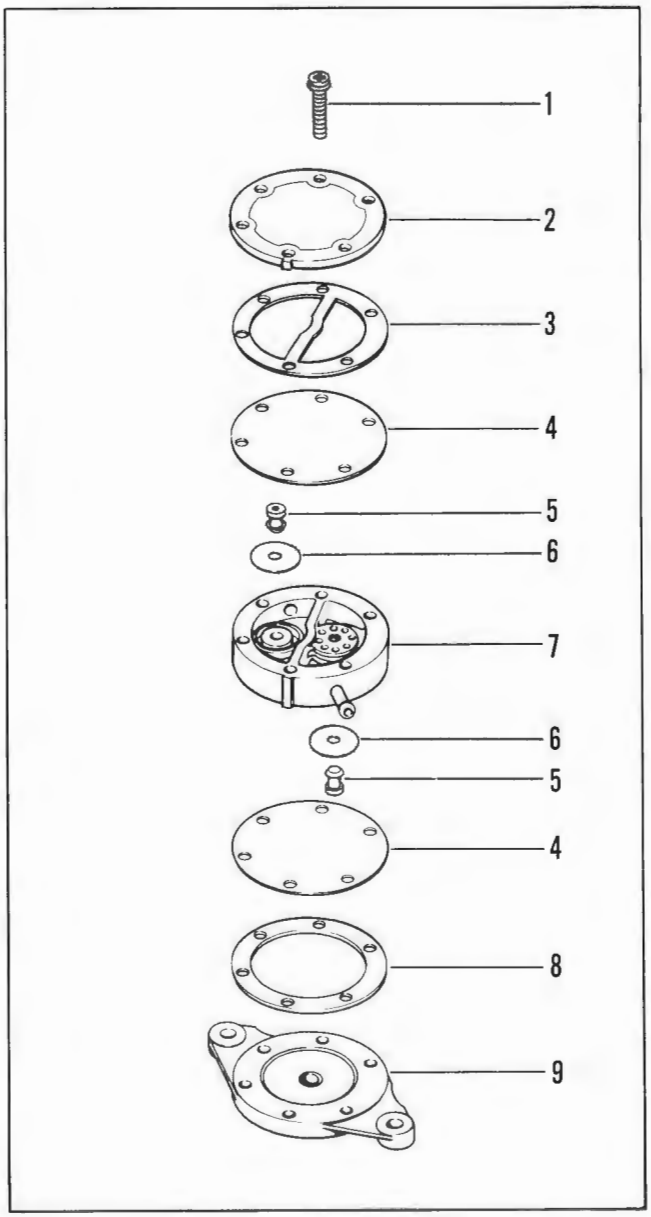

1. Screw
2. Body Cover
3. Gasket
4. Diaphragm
5. Grommet
6. Valve
7. Main Body
8. Gasket
9. Pump Casting

Figure 3-11

Reassembly (See Figure 3-11.)

1. Install lower gasket and diaphragm on pump casting.
2. Install check valves using new grommets in main body. Position main body on pump casting.
3. Install diaphragms and upper gasket. Be sure to align tabs on gasket and main body.
4. Install body cover. Be sure tab on body cover aligns with gasket and main body.
5. Install six retaining screws and tighten in a crisscross pattern.

Installation

1. Connect impulse line to bottom fitting.
2. Install fuel inlet line and fuel outlet lines. Arrows on top of body cover indicate direction of fuel flow. (See Figure 3-10.)
3. Install two fuel pump mounting bolts.
4. Replace air intake silencer to carburetor.

Engine Removal

1. Remove the hood.
2. Remove the retainer pins and remove the drive belt guard. Remove the drive belt. (See Figure 3-12.)

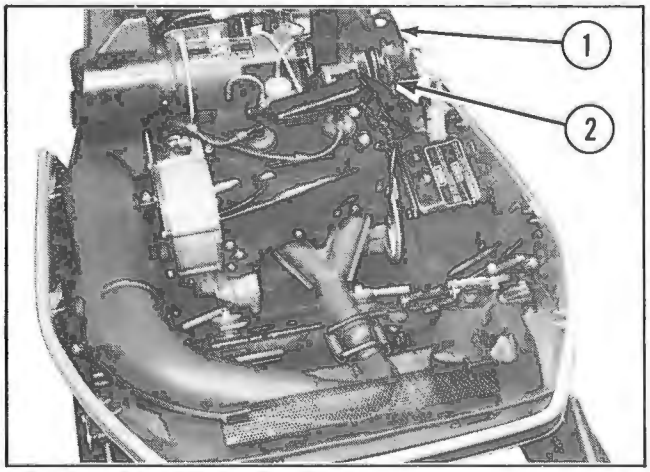

1. Drive Belt Guard
2. Drive Belt

Figure 3-12

3. Disconnect the wiring harness from the engine or circuit board as required.
4. Remove starter handle and tie a knot in the rope.
5. Disconnect the fuel impulse line from the engine as shown in Figure 3-13.

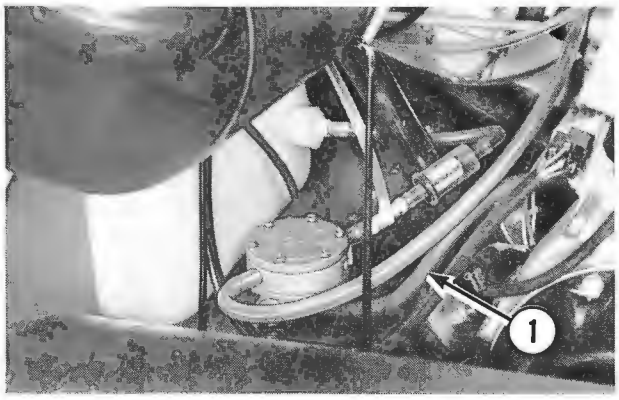

1. Impulse Line

Figure 3-13

6. Remove the carburetor from the carburetor holder by loosening clamp screw and pulling from the engine. If carburetor is to be removed, refer to the Carburetor Repair instructions.
7. Use a spring puller tool, locking pliers, or a long wire hook to disconnect the two exhaust springs.
8. Remove the four engine mounting bolts, nuts and spacers.
9. Remove the engine from the snowmobile.
10. Reinstall engine in reverse order of removal. When reconnecting the wiring harness, be sure the main wiring harness connector is fully engaged to the engine wiring harness connector. Install cable tie band around connectors to prevent separation during engine operation.

Removing External Components

1. Remove the drive converter mounting bolt and lockwasher. Install the drive converter puller bolt (Tool No. 205196) and screw in to remove the drive converter. (See Figure 3-14.)
2. Remove the exhaust manifold.
3. Remove the spark plugs.

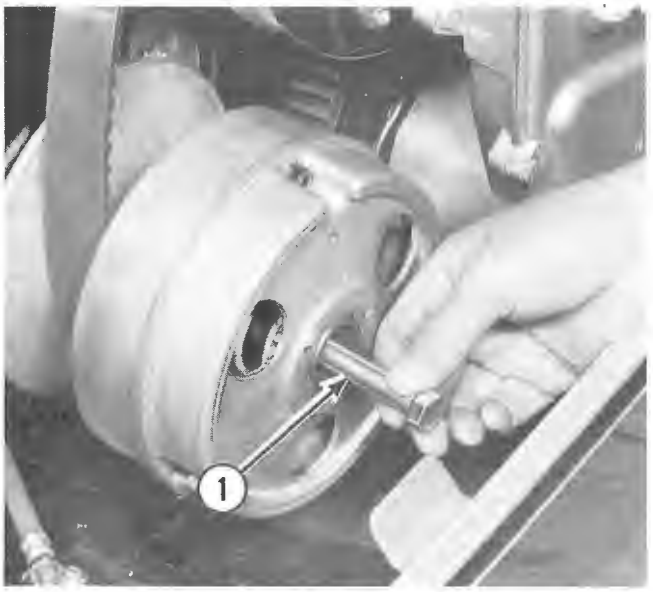

1. Drive Converter Puller Bolt

Figure 3-14

Recoil Starter

Removal

1. Remove starter handle and tie knot in rope.

2. Remove three slotted hex head bolts securing starter assembly to engine and remove starter assembly. (See Figure 3-15.)

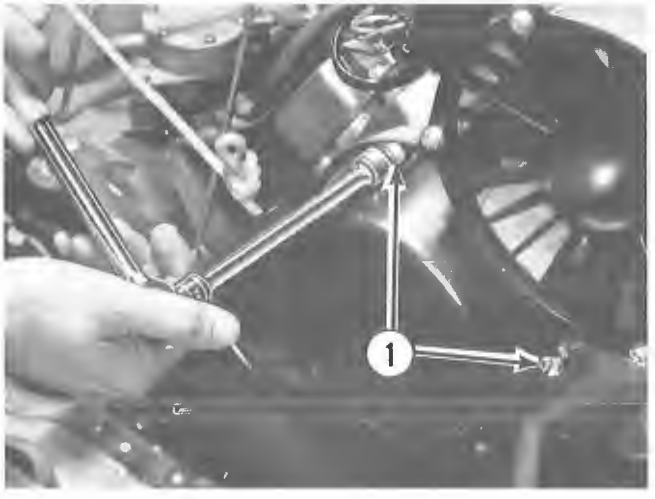

1. Slotted Hex Head Bolts (3)

Figure 3-15

Inspection

1. Pull the starter rope out 3-5 in. (76.2-127.0 mm) and examine the starter pawls for chips or excessive wear. (See Figure 3-16.) Listen for any grinding noise which might indicate a broken or worn starter spring. Examine the starter rope for excessive wear or frayed condition.

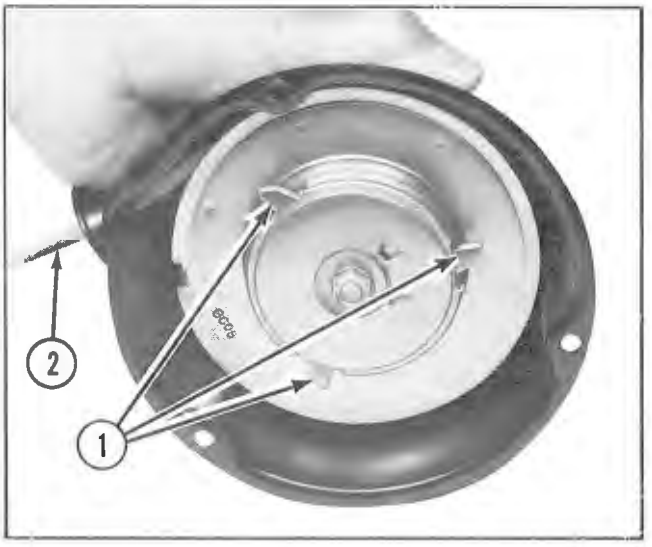

1. Starter Pawls
2. Starter Rope

Figure 3-16

Disassembly

1. Release recoil spring tension by removing handle from starter rope and allowing recoil reel to spin slowly.

2. Remove the nut and washers securing the retaining cover to the starter assembly. Exert slight downward pressure on cover to remove spring tension from retaining cover and slowly remove cover.

3. Remove the return spring, pressure spring, starter pawl springs, pawls and washer from starter assembly. (See Figure 3-17.) Check the return spring and pressure spring for breaks, rust, distorted or weakened condition.

4. To replace starter rope, remove recoil reel from starter assembly. Untie knot and remove starter rope. Install new starter rope and tie a securing knot.

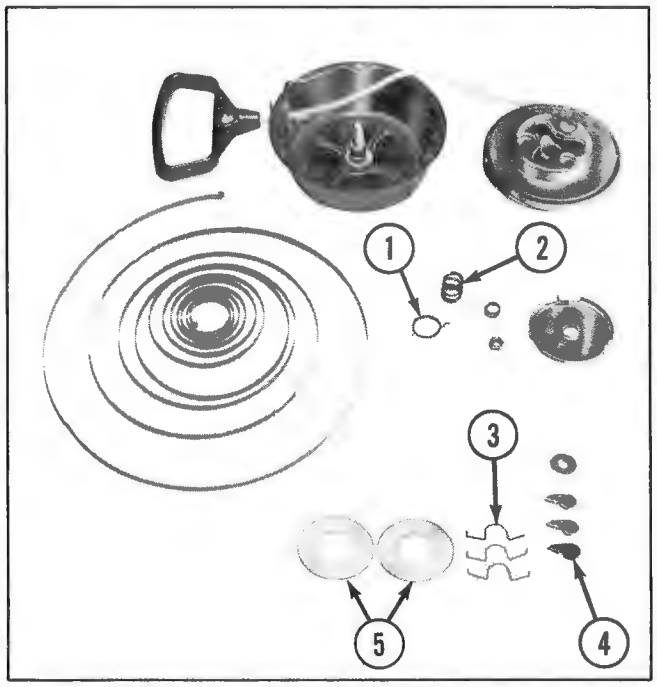

1. Return Spring
2. Pressure Spring
3. Starter Pawl Springs
4. Pawls
5. Washer

Figure 3-17

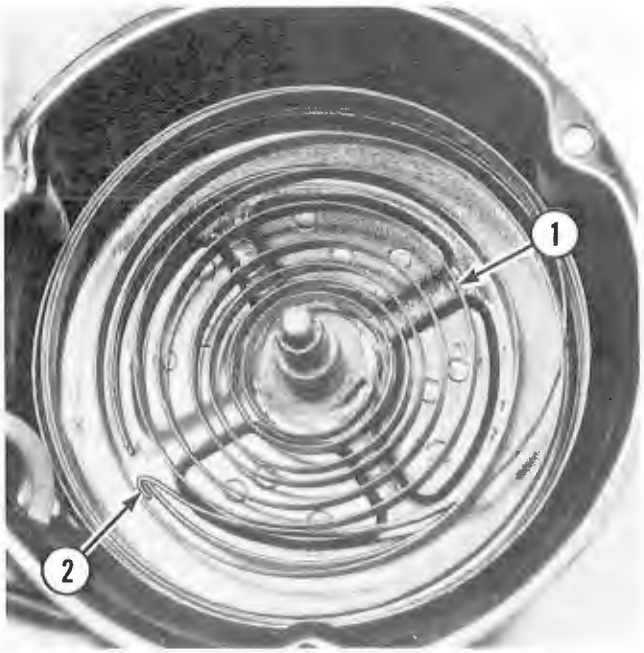

1. Recoil Spring
2. Spring Hook

Figure 3-18

WARNING

Exercise care when removing recoil reel from starter assembly. All spring tension should be released to prevent spring from accidently disengaging and causing injury. Wear safety glasses when repairing starter assembly components.

5. With recoil reel removed, as shown in Figure 3-18, examine recoil spring for cracks, crystallization or abnormal bends. Exercise care when handling recoil case to prevent recoil spring from accidently disengaging. Spring should remain in the recoil case. When installing a new recoil spring, attach hook in recoil spring to recoil case.

Reassembly

1. Thoroughly clean all parts removed prior to reassembling starter. Reassemble components as shown in Figure 3-19. Apply a light coat of low-temperature grease (Texaco 2346EP or equivalent) on recoil reel and recoil spring.

2. Apply correct recoil spring tension by placing rope in notch of recoil reel and rotate reel COUNTERCLOCKWISE four turns. Release rope from notch and allow rope to rewind.

3. Secure starter assembly to engine using three hex head bolts. Insert starter rope through guide in chassis and attach starter handle to starter rope. Pull starter a few times and observe starter operation.

NOTE: Before bolts are tightened pull slightly on starter rope to engage pawls, then tighten bolts securely.

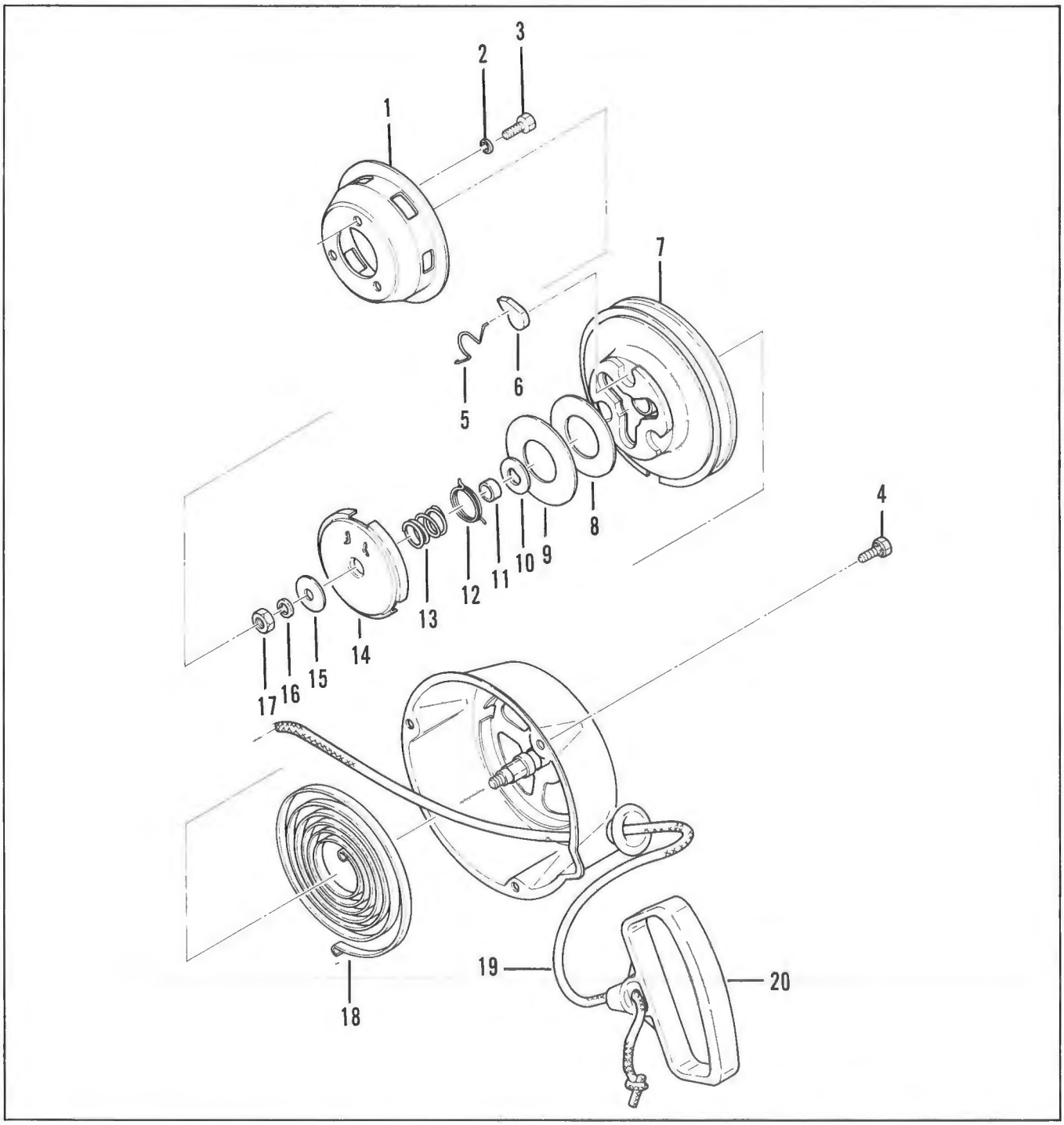

1. Starter Pulley
2. Spring Washer
3. Bolt
4. Bolt
5. Pawl Return Spring
6. Recoil Pawl
7. Recoil Rope Reel
8. Recoil Slide Plate B
9. Recoil Slide Plate A
10. Thrust Washer
11. Nylon Bushing
12. Plate Return Spring
13. Friction Spring
14. Friction Plate
15. Thrust Washer
16. Spring Washer
17. Nut
18. Spiral Rope Return Spring
19. Recoil Rope
20. Recoil Rope Handle

Figure 3-19

Air Shrouds

Removal

1. Using an impact driver, remove twelve screws, lockwashers and washers securing main shroud to engine. Impact driver must be used to prevent stripping the screw heads because Loctite was applied to screws during assembly. (See Figure 3-20.)

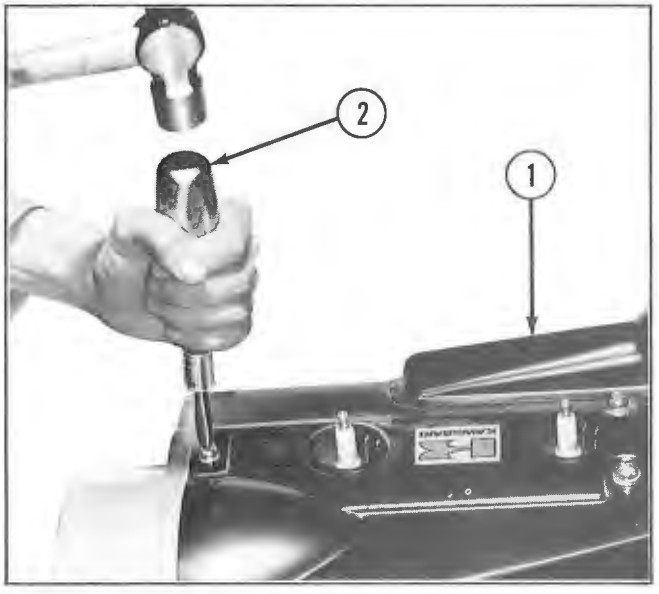

1. Main Engine Shroud
2. Impact Driver

Figure 3-20

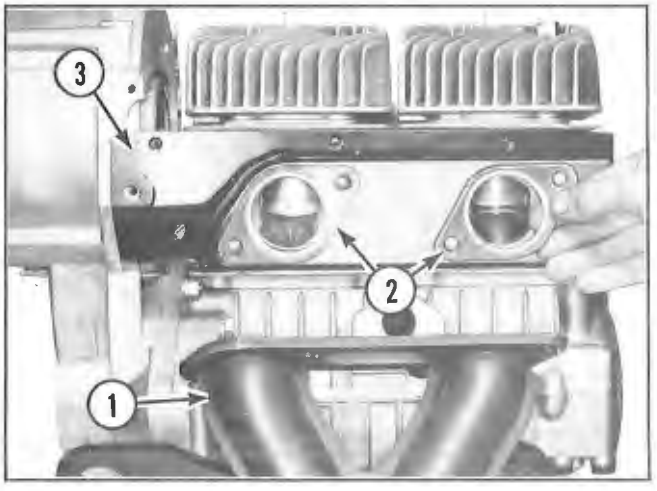

1. Exhaust Manifold
2. Gaskets
3. Exhaust Air Shroud

Figure 3-21

2. Remove four nuts and lockwashers securing exhaust manifold, gaskets and exhaust air shroud to engine. Discard gaskets. (See Figure 3-21.)
3. Remove six bolts, lockwashers and flat washers securing intake manifold, gaskets and intake air shroud to engine. Discard gaskets.

Inspection

1. Thoroughly clean air shrouds in a solvent and blow dry using compressed air.
2. Inspect air shrouds for cracks, distortion or rust.
3. Check intake and exhaust manifolds for cracks. Check gasket surfaces and clean using a scraper.

Reassembly

1. Reassemble air shrouds, intake and exhaust manifolds to engine. Using new gaskets, assemble (2 each per cylinder) one on each side of exhaust and intake air shrouds. Secure using hardware previously removed. Torque brass exhaust manifold mounting nuts to 10 ft lb (1.38 kg-m) and intake manifold bolts to 4-5 ft lb (0.55-0.69 kg-m).

CAUTION

If cylinders or cylinder heads have been removed intake manifold bolts must be secured before torquing nuts securing heads and cylinders.

NOTE: Apply Loctite to main air shroud screws. Use an impact driver to assure main air shroud screws are tight.

2. Always use new gaskets during reassembly to ensure proper connections.
3. Install rubber damper to intake air shroud to prevent unnecessary engine noise.

CDI Magneto and Fan Housing

Removal

1. Remove four screws securing the fan screen to the fan housing. (See Figure 3-22.)

Figure 3-22

2. Remove flywheel retaining nut from the crankshaft. Use a long rod or a large screwdriver in the starter pulley to hold the crankshaft from turning. (See Figure 3-23.)

Figure 3-23

3. Remove three bolts and washers securing starter pulley and fan drive pulley to the flywheel. Remove fan belt and pulley. (See Figure 3-24.)

4. Install flywheel puller tool No. T56019-011 and remove the flywheel. (See Figure 3-25.) Use a side cutter to remove the woodruff key from the crankshaft.

Figure 3-24

Figure 3-25

5. Prior to removing the stator assembly, scribe an aligning mark from the stator plate to the crankcase. (See Figure 3-26.) Upon reassembly, the stator plate may be installed with the scribe marks aligned and ignition timing returned to its original setting.

6. Separate the harness plug from the connector mounted on the fan housing. Disconnect the five wires running from the stator to the CDI igniter and the harness connector, using a needle hose pliers. Note the position of wire colors for proper location during reassembly.

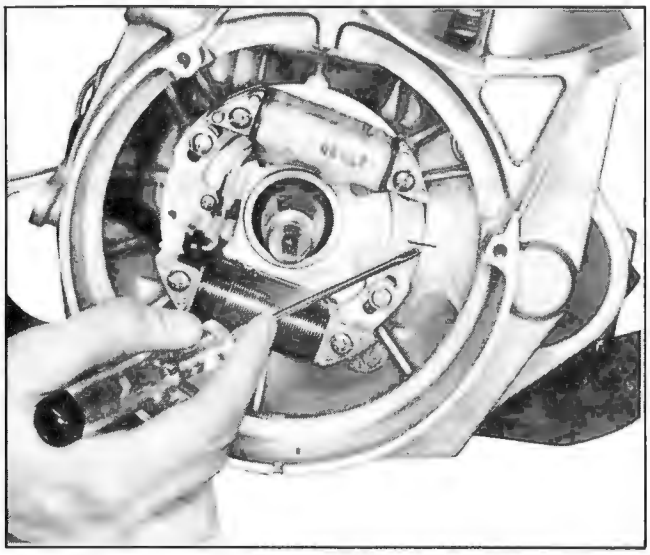

Figure 3-26

7. Remove the two screws and washers securing the stator plate to the crankcase and remove the stator assembly. Remove the stator harness and wires from the rubber grommet.

8. Refer to Figure 3-28 for stator disassembly sequence.

9. Separate the three wire connector. Remove the two screws holding the ignition coil to the fan housing. Remove the ignition coil. (See Figure 3-27.)

10. Remove the two screws securing the CDI igniter to the fan housing. Remove the CDI igniter.

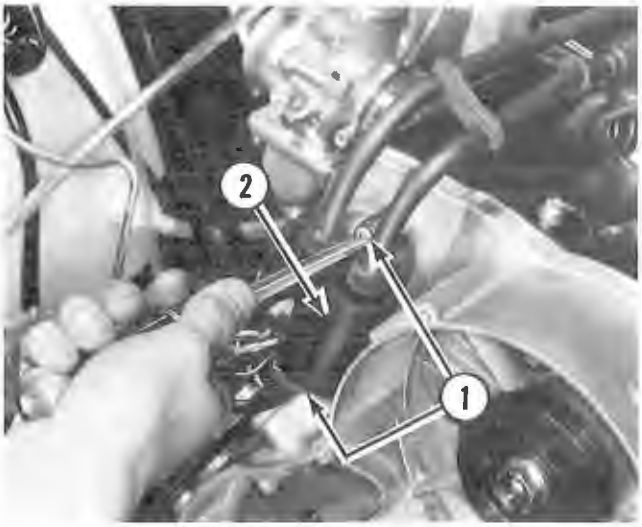

1. Coil Mounting Screws
2. Ignition Coil

Figure 3-27

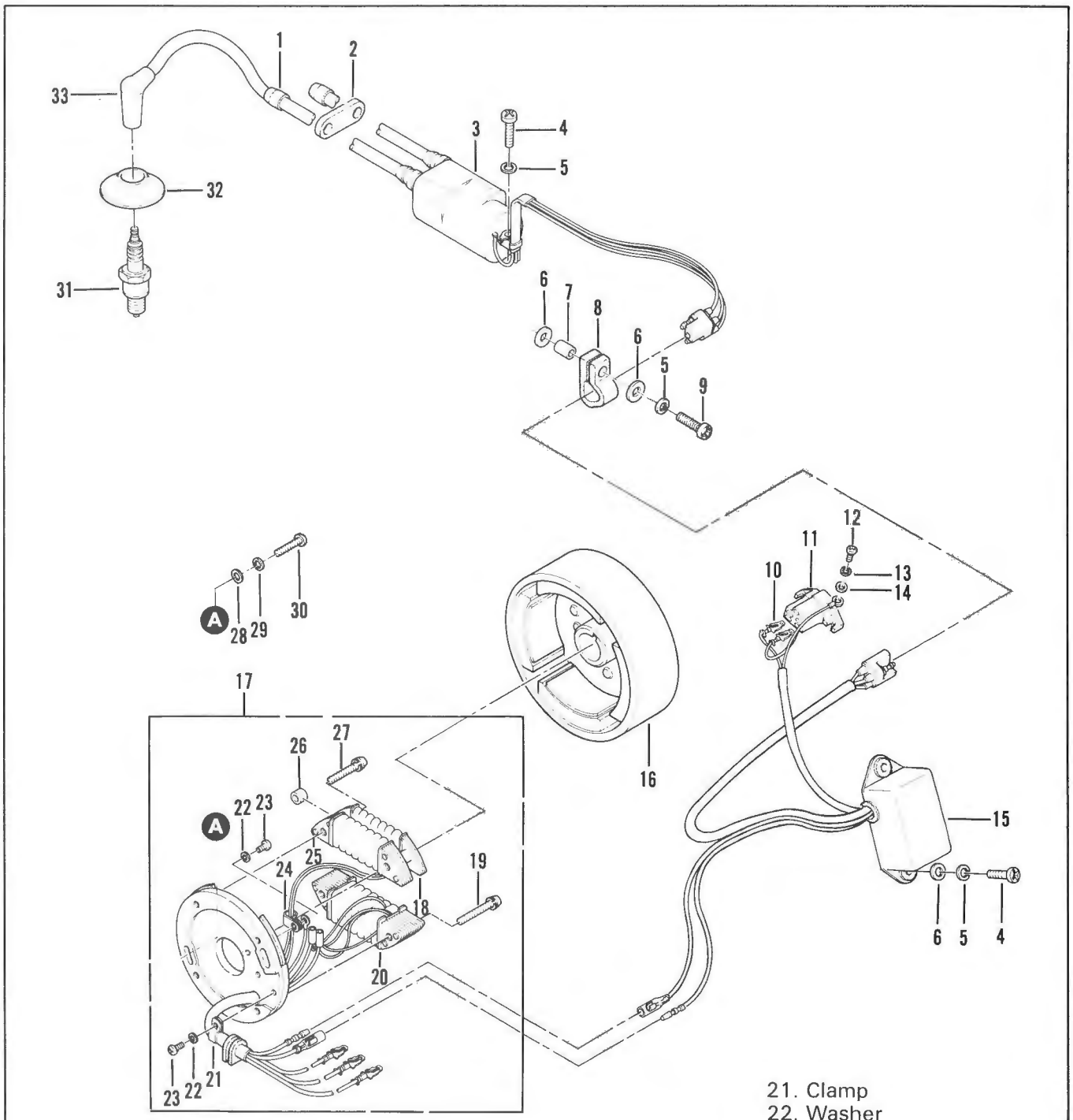

1. Grommet
2. Grommet Wire Spacer
3. Ignition Coil
4. Screw
5. Washer
6. Washer
7. Collar
8. Clamp
9. Screw
10. Terminal
11. Connector
12. Screw
13. Washer
14. Washer
15. CDI Igniter
16. Flywheel
17. Stator Assembly
18. Pulser Coil
19. Screw
20. Lighting Coil
21. Clamp
22. Washer
23. Screw
24. Clamp
25. Exciter Coil
26. Collar
27. Screw
28. Washer
29. Washer
30. Screw
31. Spark Plug
32. Plug Cap Boot
33. Spark Plug Cap

Figure 3-28

Fan Housing

Removal

1. Remove four nuts and washers securing fan housing to crankcase and remove fan housing. (See Figures 3-29 and 3-30.)

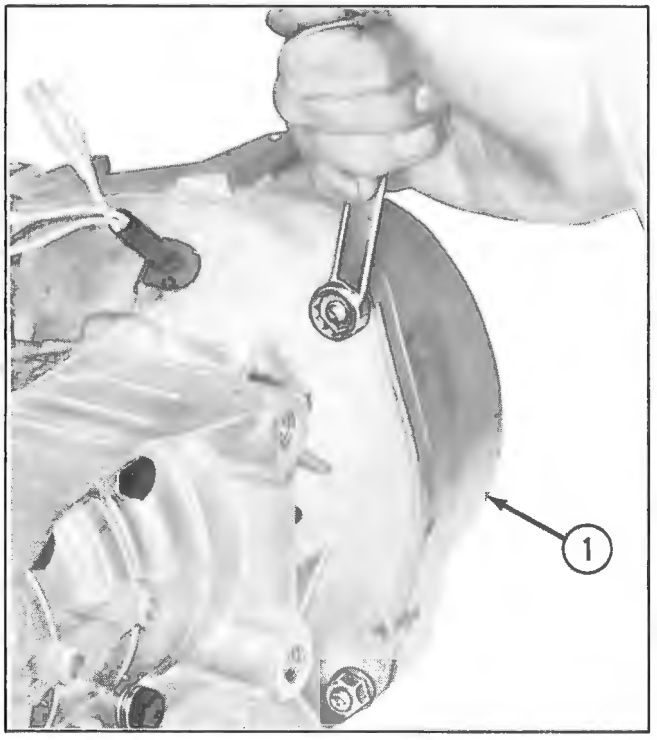

1. Fan Housing

Figure 3-29

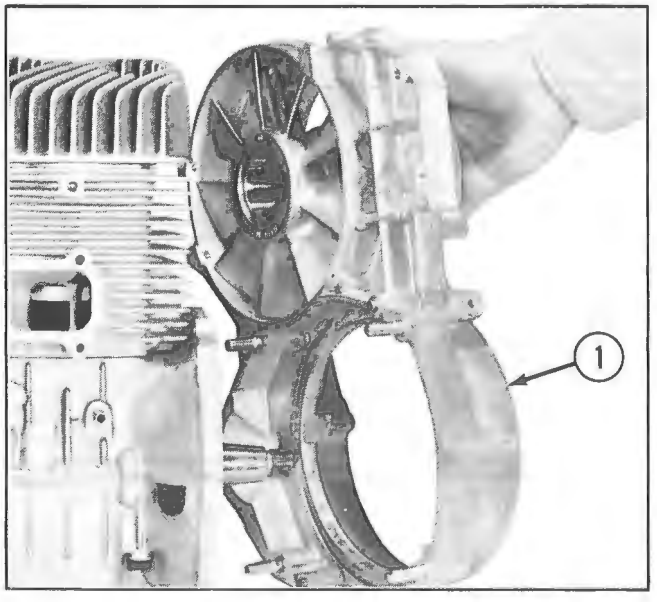

1. Fan Housing

Figure 3-30

Disassembly

1. Using fan pulley holder tool No. 205208 remove nut and washer securing fan assembly to fan housing. (See Figure 3-31.)

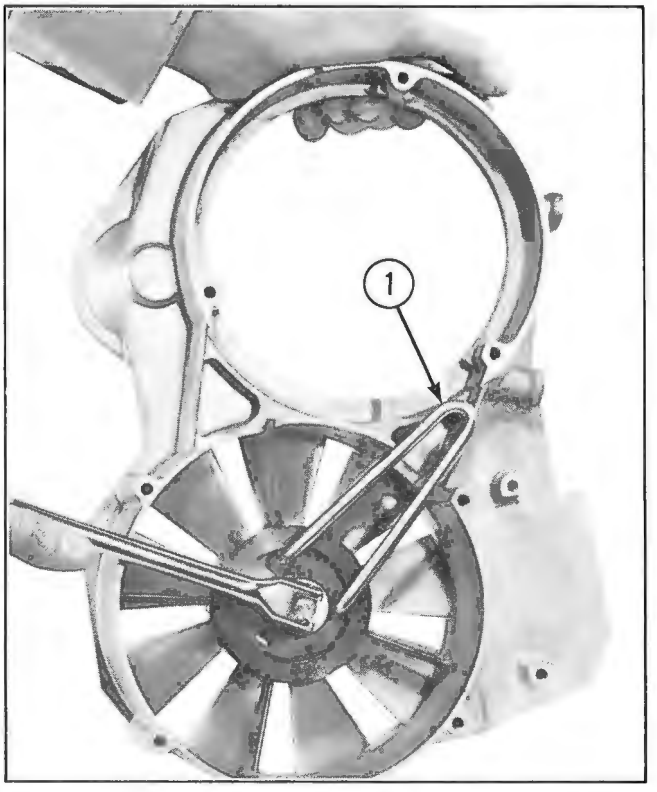

1. Fan Pulley Holder Tool No. 205208

Figure 3-31

2. Remove fan pulley halves and spacers from fan shaft. (See Figure 3-32.)

NOTE: Spacers are used between the fan pulley halves to adjust fan belt tension. Using fewer spacers increases fan belt tension. During reassembly place half of the spacers removed behind the inside pulley half and the balance outboard of the outside pulley half to maintain proper belt alignment.

3. Using a heat gun or propane torch, heat aluminum fan housing allowing bearings to be removed from fan housing.

WARNING

Do not contact heated fan housing with bare hands or severe burn could result.

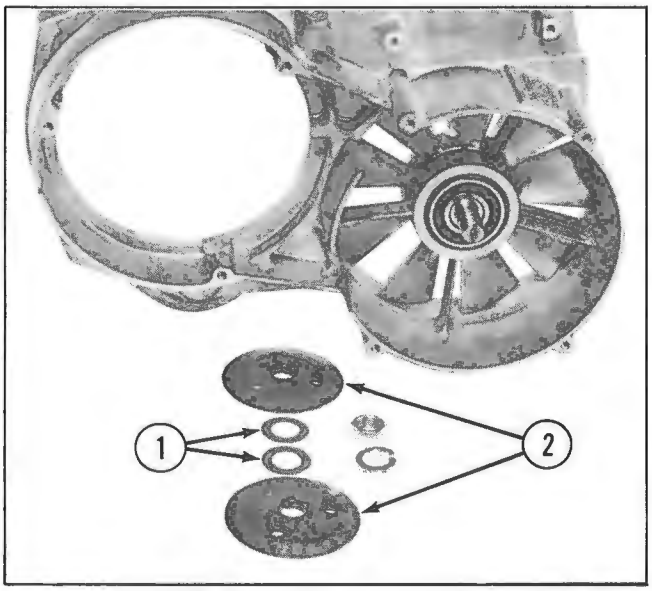

1. Spacers
2. Pulley Halves

Figure 3-32

4. Using Tru-Arc or circlip pliers remove circlip and two spacers from fan housing. (See Figure 3-33.)

NOTE: Circlip is used to correctly position bearings. Spacers are installed between bearings to eliminate side loads when shaft nut is tightened.

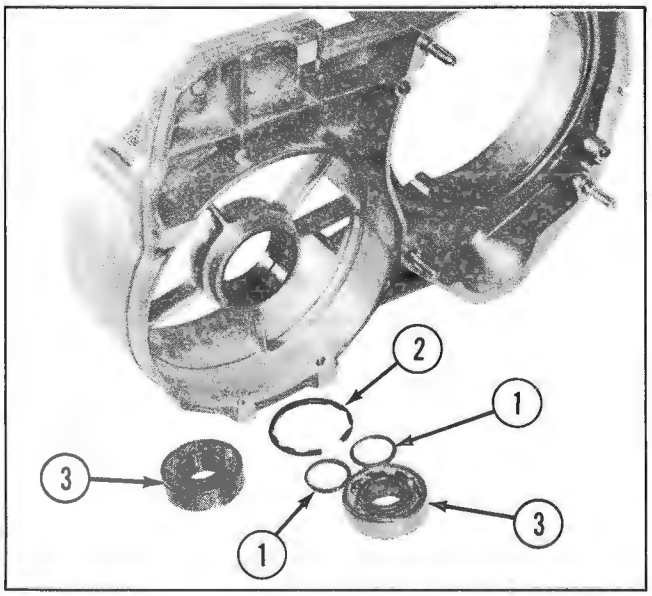

1. Spacers (2)
2. Ciclip
3. Bearings

Figure 3-33

Inspection

1. Inspect all lead wires for cracks or frayed condition.
2. Check magnets in rotor assembly. Thoroughly clean magnet area to remove any metal filings or particles that magnets may have attracted.
3. Check woodruff key and keyway for damage.
4. Inspect fan housings for cracks or distortion.
5. Check bearings for discoloration and wear.
6. Check fan belt for excessive wear.
7. Check cooling fan assembly for missing or damaged blades.
8. Check threads on all mounting studs for damage.

Reassembly

1. Install Circlip in fan housing.
2. Using a heat gun or propane torch heat the aluminum fan housing and insert fan-side bearing. Insert fan shaft through bearing to serve as a pilot for spacers. (See Figure 3-34.)

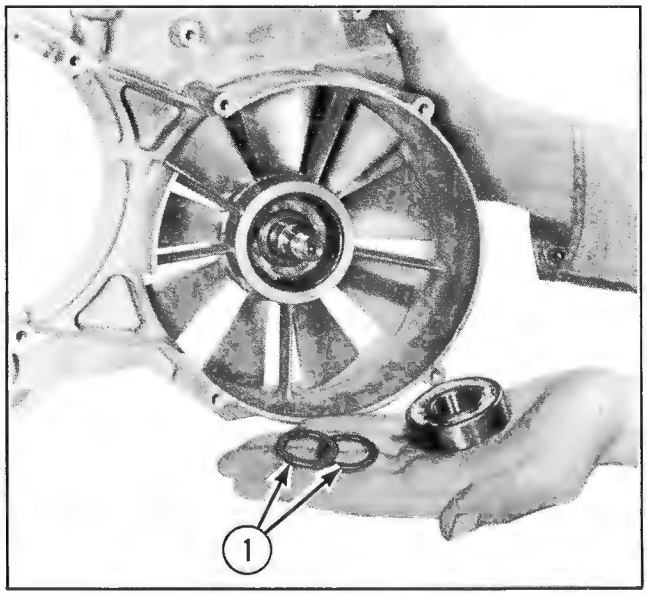

1. Spacers

Figure 3-34

NOTE: Insert two spacer washers between bearings to eliminate side loads when shaft nut is tightened.

3. Insert pulley-side bearing in case. Attach pulley half to shaft. Assemble same number of pulley spacer washers to shaft as previously removed and attach remaining pulley half to shaft. Secure pulley halves to shaft using washer and nut, turning nut only hand tight to ease removal when making any necessary adjustments to fan belt tension.

Installation

1. Reassemble all components to stator assembly.
2. Insert electrical leads through grommet in crankcase and reinstall stator assembly to crankcase. Align timing mark made during disassembly. Secure stator assembly using two screws and washers previously removed. (See Figure 3-35.)

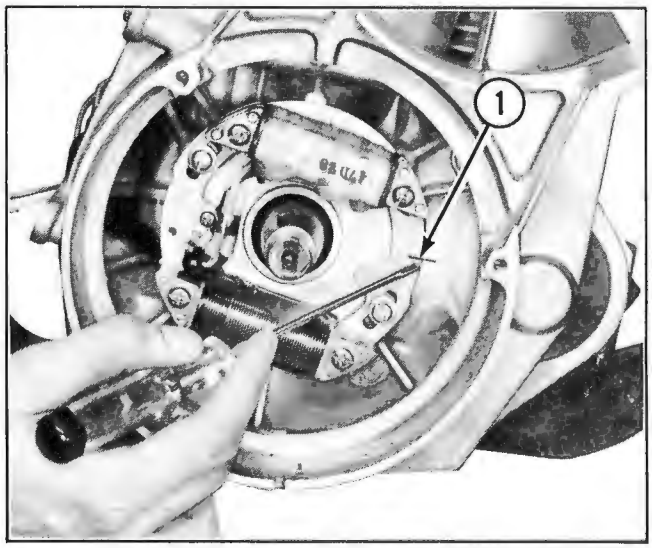

1. Timing Mark

Figure 3-35

3. Install fan housing to crankcase. Secure using four nuts and eight washers previously removed. Tighten nuts securely. Attach stator electrical leads to connectors. Match wire colors with wires in main harness half of connector. (See Figure 3-36.)

WARNING

When reconnecting the wiring harness, be sure the main wiring harness connector is fully engaged to the engine wiring harness connector. Install cable tie band around connectors to prevent separation during engine operation.

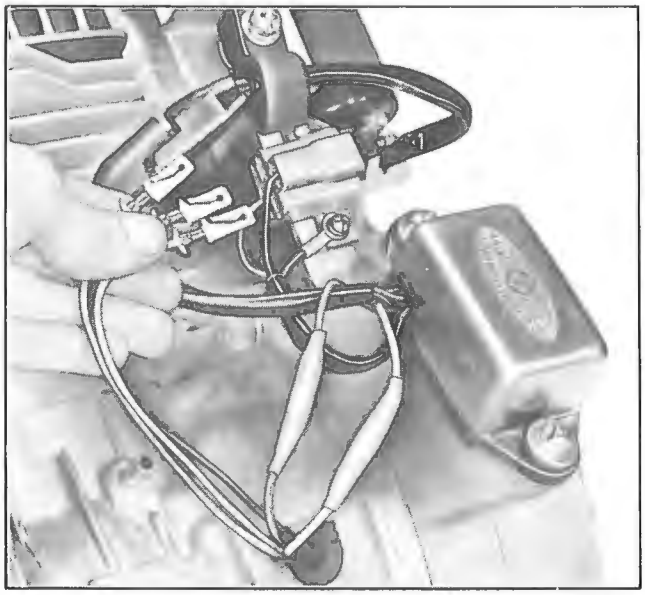

Figure 3-36

4. Secure ignition coil to fan housing using two screws and washers. Tighten securely.
5. Install woodruff key to crankshaft. Reassemble flywheel to crankshaft and secure with washer and flywheel nut. Torque flywheel nut to 60 ft lb (8.3 kg-m).
6. At this point, the ignition timing marks on the flywheel and fan housing may be checked for proper alignment as described in Section 2.
7. Install fan belt, fan drive pulley and starter pulley to flywheel. Secure using three bolts and lockwashers. Tighten bolts evenly to prevent distortion of pulleys. (See Figure 3-37.)

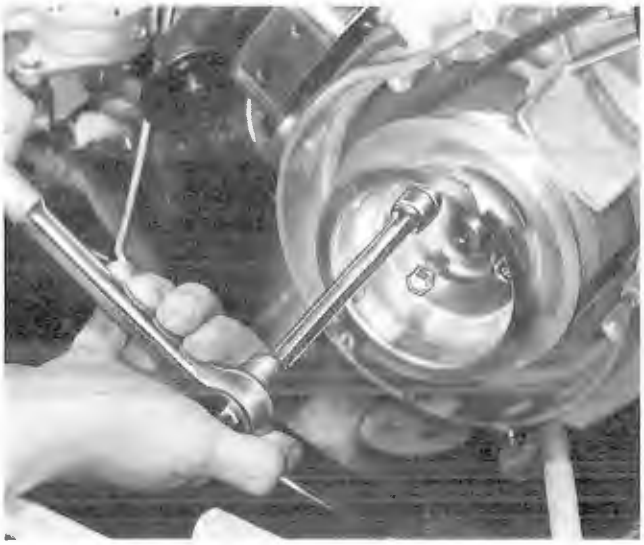

Figure 3-37

NOTE: Install fan drive pulley with machined shoulder toward flywheel.

8. Check fan belt tension by measuring belt deflection with 10 lb (5 kg) force applied to belt. Correct belt deflection should be 5/32 in. (3.5 to 4.5 mm). If adjustment is required remove or add spacers between fan pulley halves until correct measurement is obtained. Removing spacers will increase belt tension. (See Figure 3-38.)

9. Secure plastic fan cover to fan housing. Tighten four screws evenly to prevent damaging the fan cover.

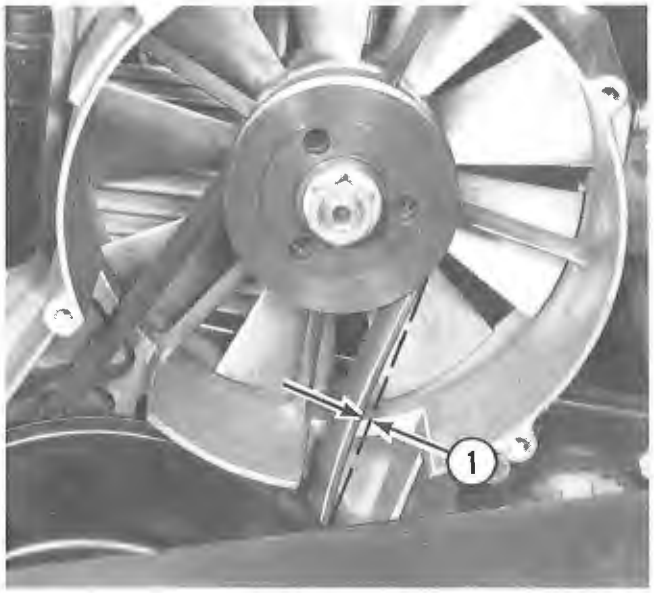

1. 5/32 in. (3.5 to 4.5 mm Deflection)

Figure 3-38

Cylinder Heads, Cylinders And Pistons

Cylinder Heads

REMOVAL

1. Remove spark plugs. Mark heads, cylinders, and crankcase for reference in reassembly.

2. Remove eight nuts, lockwashers and washers securing cylinder heads to cylinders, using a 13 mm socket and 3 in. extension. Carefully remove cylinder heads and gaskets. Discard gaskets. (See Figure 3-39.)

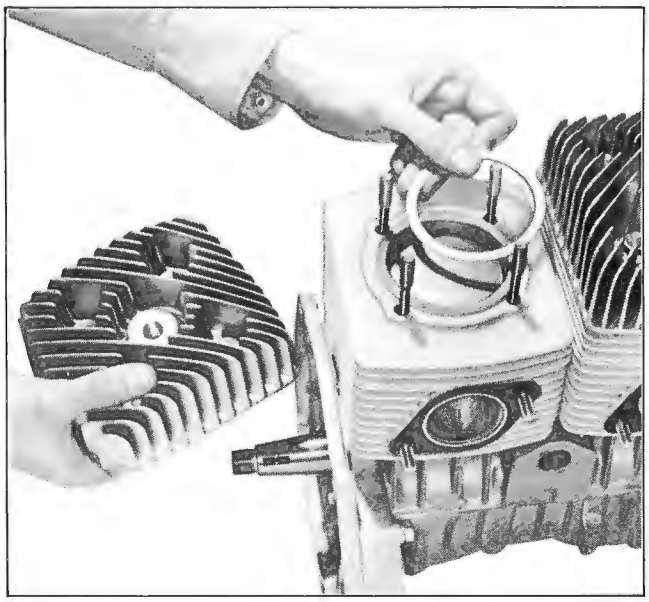

Figure 3-39

INSPECTION

1. Remove excessive carbon from inside cylinder head using a nonferrous carbon scraper, or cylinder head brush.

2. Inspect cooling fins for damage.

3. Wash cylinder head in solvent and blow dry using compressed air.

4. Place a straight edge across the gasket surface of the head to detect any warpage. Measure in several spots. If slight distortion is present it can be corrected by using No. 400 sandpaper on a surface plate and rubbing head in a circular motion to remove high spots.

NOTE: Dying the gasket surface before you begin will indicate high spots after some sanding.

Cylinders

REMOVAL

1. Gently tap cylinder with a soft mallet to release seal.

2. Carefully remove cylinders from crankcase studs. Hold piston during cylinder removal to prevent piston from suddenly contacting studs or crankcase. (See Figure 3-40.)

3. Remove and discard cylinder base gaskets.

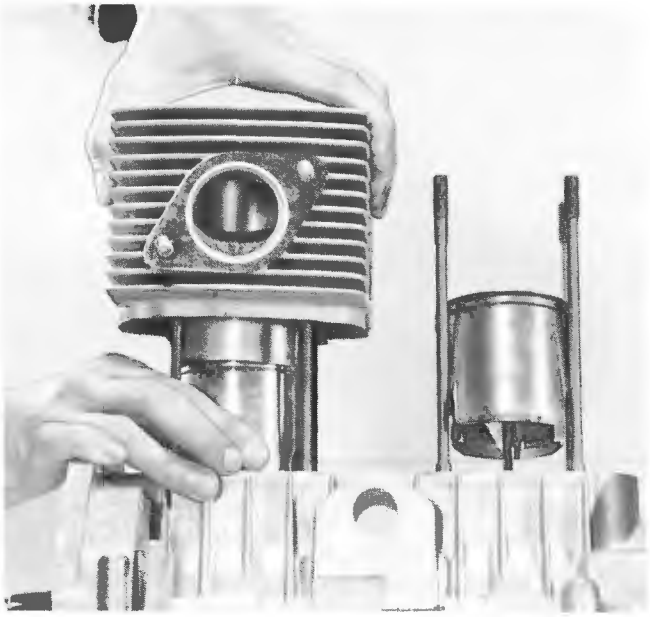

Figure 3-40

INSPECTION

1. Check the cylinder for damaged or broken fins.
2. Thoroughly clean all carbon deposits from exhaust ports and cylinder walls.
3. Check cylinder wall for excessive scoring.
4. Using a dial bore gauge check cylinder bore for out-of-round or taper condition. (See Figure 3-41.)

NOTE: To check for out of round of the cylinder bore move the bore gauge in a circular direction, 90° at a time. The difference in measurements obtained should not exceed 0.002 in. (0.05 mm).

NOTE: To check for taper of the cylinder bore, move the bore gauge from the top to the bottom of the cylinder. The difference in the measurements obtained (between top and bottom) should not exceed 0.002 in. (0.05 mm).

Should the measured dimension of the cylinder bore exceed the service limit given in the accompanying chart, replace the cylinder. Examine the cylinder wall for excessive wear, scoring or deep lines, and replace cylinder if necessary.

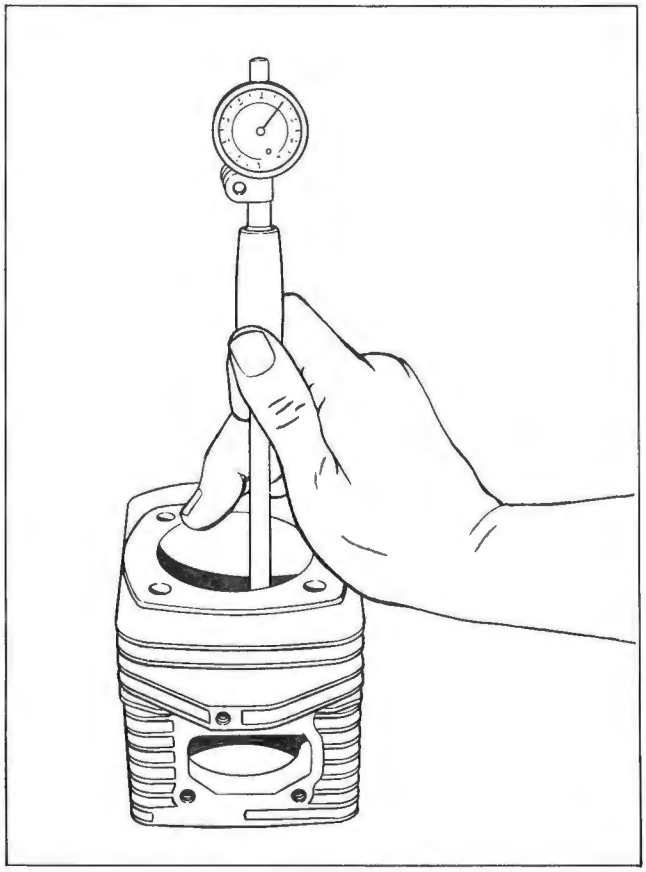

Cylinder Bore Diameter

Standard (New)	Service Limit (Used)
2.6774 - 2.6781 in. (68.005 - 68.023 mm)	2.681 in. (68.10 mm)

Figure 3-41

Pistons

REMOVAL

1. Seal crankcase with clean shop rag and using a sharp steel pointer remove piston circlips. Discard circlips. (See Figure 3-42.)
2. Using piston pin puller tool No. 57001-910 remove piston pins from pistons and remove piston from connecting rod. (See Figure 3-43.)

NOTE: Keep piston pin bearings together as a set and mark pistons left and right to assure correct reassembly.

3. Using a ring expander tool remove rings from piston.

NOTE: Do not interchange rings between pistons.

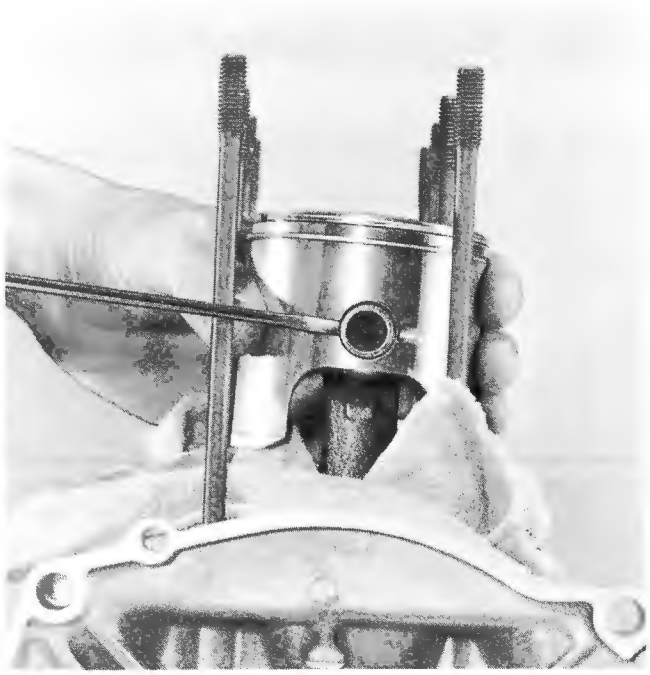

Figure 3-42

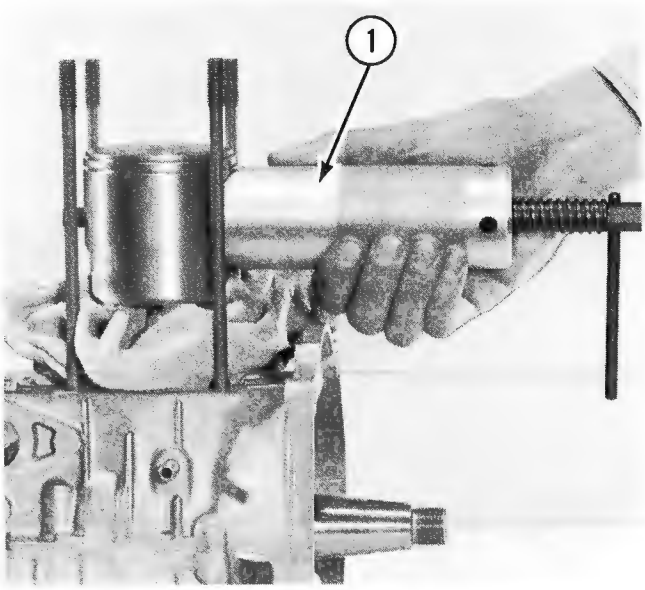

1. Piston Pin Puller Tool No. 57001-910

Figure 3-43

INSPECTION

1. Remove all carbon from piston dome, ring grooves and piston skirt.

NOTE: If piston dome or skirt is scored or pitted from overheating, replace piston and piston rings.

2. Using a micrometer measure the outside diameter of each piston at right angle to piston pin hole and 3/16 in. (4.76 mm) from bottom. (See Figure 3-44.)

Piston Skirt Diameter

Standard (New)	Service Limit (Used)
2.6744 - 2.6752 in. (67.929 - 67.950 mm)	2.670 in. (67.82 mm)

Figure 3-44

Should the measured piston skirt diameter be less than the service limit specified in the above table, replace the piston. Measure the skirt diameter of the new piston to be used, and subtract the figure obtained from the measured cylinder bore diameter. Piston skirt-to-cylinder wall clearance must be between 0.001 and 0.003 in. (0.0254 - 0.762 mm). If this computed difference is greater than the specified tolerance, a new cylinder will also be needed.

3. Check piston pin for wear or damage. Using a 1 in. outside micrometer measure piston pin diameter. (See Figure 3-45.)

Should piston pin diameter be less than specified service limit, pin and needle bearing set must be replaced.

Piston Pin Diameter

Standard (New)	Service Limit (Used)
0.6297 - 0.6299 in. (15.994 - 16.000 mm)	0.628 in. (15.98 mm)

Figure 3-45

Piston Pin Bore Diameter

Standard (New)	Service Limit (Used)
0.6299 - 0.6301 in. (15.999 - 16.005 mm)	0.633 in. (16.08 mm)

Figure 3-46

4. Measure piston pin bore diameter by inserting a snap gauge approximately 1/4 in. (6.35 mm) into piston pin bore. Remove snap gauge and measure it using a 1 in. outside micrometer. If measured diameter is greater than service limit given in Figure 3-46, replace piston.

5. Check needle bearings and needle bearing cage for wear or overheating.

6. Check piston ring gap by inserting piston ring into cylinder near the bottom where no ports exist. Insert feeler gauge between opening in the ends of the piston ring. (See Figure 3-47.)

Piston Ring End Gap

Standard (New)	Service Limit (Used)
0.008 - 0.016 in. (0.2 - 0.4 mm)	0.028 in. (0.7 mm)

Figure 3-47

If measured ring gap is greater than service limit given in above table, new rings should be installed.

7. Measure clearance between piston ring and groove as shown in Figure 3-48. If measured tolerance exceeds the service limit specified in the accompanying table, install a new ring on the piston, and recheck. Should measurement still exceed service limit, obtain a new piston, recheck ring/groove clearance and piston-to-cylinder-wall clearance.

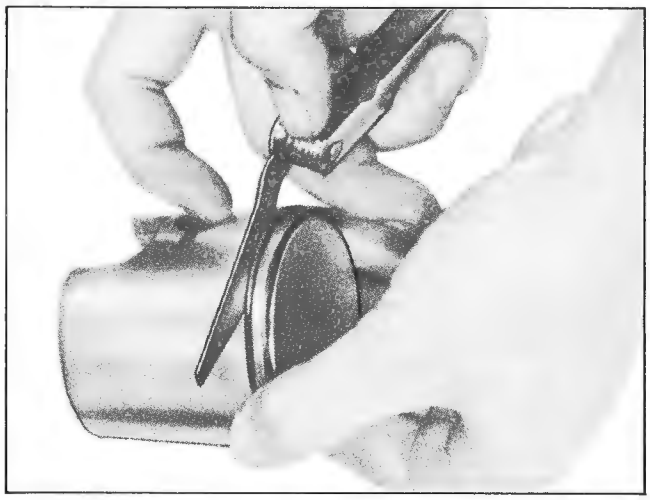

Top Ring/Groove Clearance

Standard (New)	Service Limit (Used)
0.0020 - 0.0047 in. (0.05 - 0.12 mm)	0.009 in. (0.22 mm)

Bottom Ring/Groove Clearance

Standard (New)	Service Limit (Used)
0.0020 - 0.0035 in. (0.05 - 0.09 mm)	0.008 in. (0.19 mm)

Figure 3-48

REASSEMBLY

1. Install new cylinder base gaskets on crankcase.

2. Apply light coat of oil to piston pin needle bearings and insert needle bearings into upper connecting rod.

3. Install piston to connecting rod with arrow pointing toward exhaust side. Insert piston pin and using piston pin puller tool No. 57001-910 draw piston pin carefully into piston. (See Figure 3-49.) Secure piston pin using new circlips.

CAUTION

New circlips must be used to prevent serious engine damage.

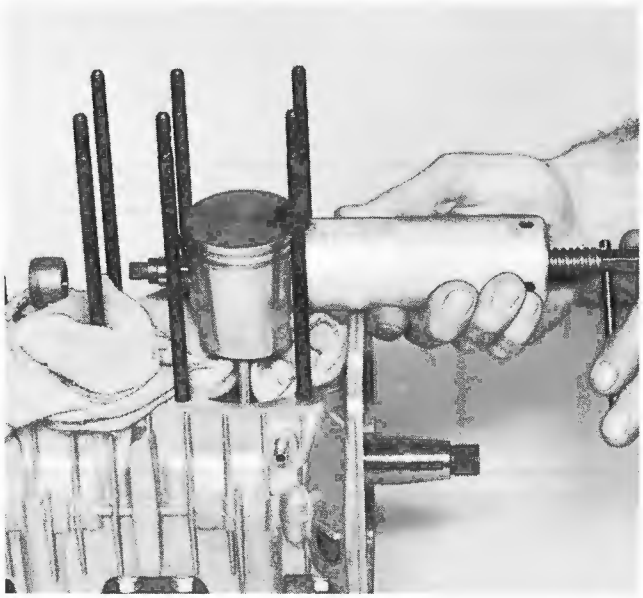

Figure 3-49

4. Apply a light coat of oil to the inside of cylinders and outside of pistons. Align piston rings with locating pins on piston and using ring compressor tool No. T57001-130 compress the rings and install cylinders over pistons. (See Figure 3-50.)

CAUTION

Make sure piston rings are in correct position to prevent breakage.

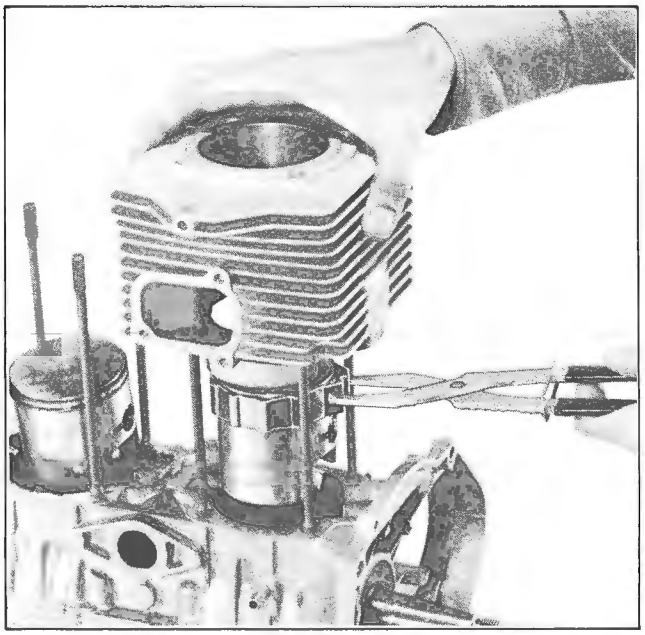

Figure 3-50

5. Install new head gaskets to cylinders.

6. Set cylinder heads in place on correct cylinders and loosely install the eight nuts, washers and lockwashers. Do not tighten cylinder nuts until intake manifold is installed. Refer to Section 2 for correct torque.

NOTE: The long nuts are installed on the outside studs of the PTO side cylinder head.

7. Install spark plugs and torque to 20 ft lb (2.77 kg-m).

Crankcase Assembly

Disassembly

1. Remove eleven bolts, lockwashers and washers securing crankcase halves. (See Figure 3-51.)

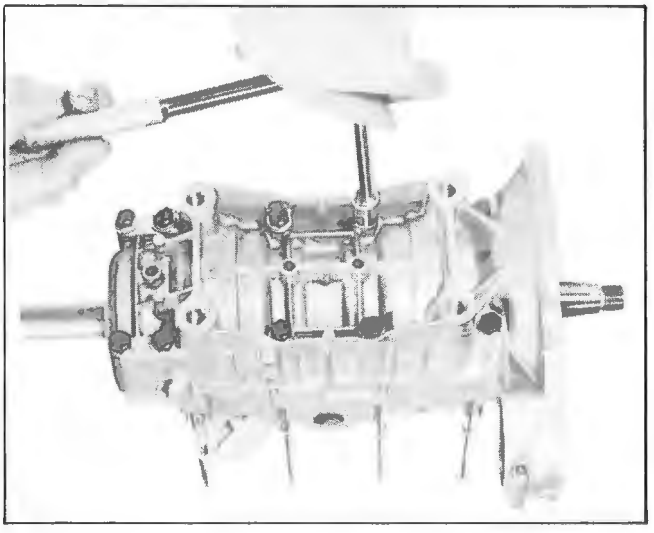

Figure 3-51

2. With a plastic hammer tap on end of lower case half to break seal, and remove lower case. (See Figure 3-52.)

CAUTION

Never pry crankcase halves apart with screwdriver or similar tool. Sealing surfaces will be damaged making crankcase unusable.

3. Carefully remove crankshaft from crankcase. Remove oil seals and washers from crankshaft. (See Figure 3-53.)

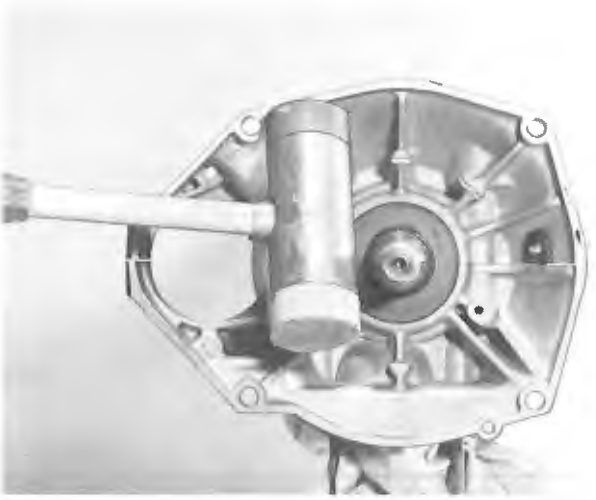

Figure 3-52

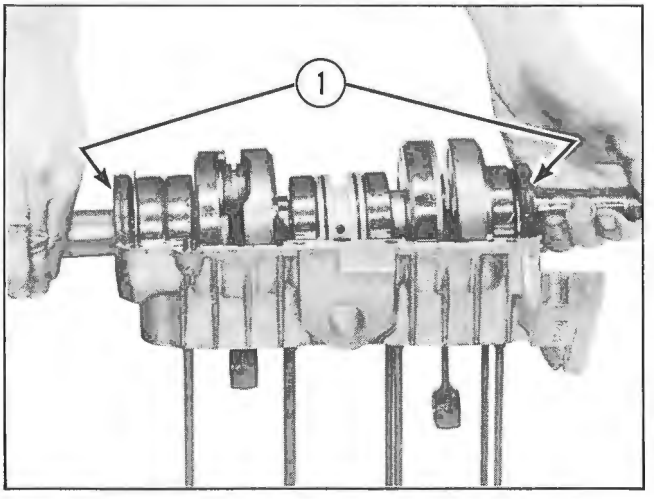

1. Oil Seals

Figure 3-53

Inspection

1. Wash crankcase halves in cleaning solvent, dry using compressed air.

2. Inspect crankcase halves for scoring, pitting, scuffing or any imperfection in the castings that may cause a crankcase leak.

3. Check oil seals for wear, cracks or deterioration. Replace seal if damage is suspected. Check washers for damage.

4. Clean crankshaft in cleaning solvent, dry using compressed air.

5. Check keyway for damage. Inspect magneto external threaded end for damaged threads. Check PTO internal threads for damage. Check taper on both ends of crankshaft for scratches, scoring or signs of excessive wear.

6. Check rubber O-rings on center seal for damage.

7. Check crankshaft main outer bearings for discoloration, wear, or skuffing. After oiling, bearings should rotate freely on crankshaft with no binding or ginding noise evident. No noticeable play in bearing should exist perpendicular to its axis. Replace bearings if damage is suspected.

If bearings require replacement, use puller tool No. 57001-158 to remove bearings. (See Figure 3-54).

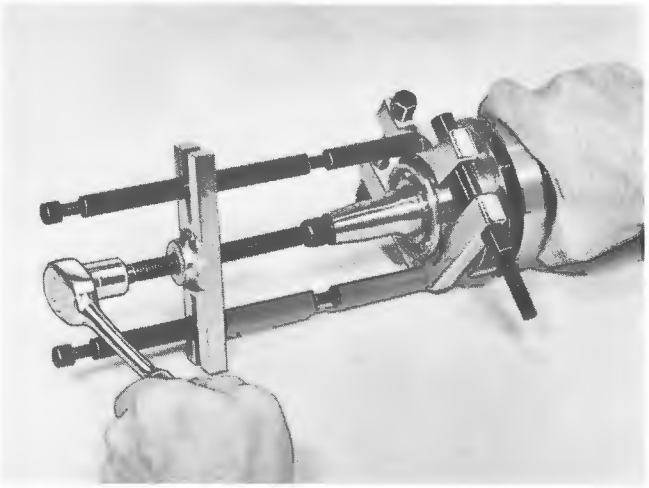

Figure 3-54

NOTE: Inner main bearings and labyrinth seal must also show no evidence of bluing, scoring, radial looseness due to wear, or grinding sound, and should turn freely on the shaft after oiling. Any defect found will indicate need for crankshaft replacement.

New outer main bearings are easily installed on crankshaft after heating inside bearing race with a heat gun or setting bearing on light bulb. After bearing is heated properly, slide bearing into correct position on crankshaft.

Checking Connecting Rod Big End

1. Check connecting rod side play by inserting a feeler gauge between connecting rod big end and crankshaft flyweight. (See Figure 3-55.) Correct side clearance is 0.016-0.020 in. (0.41-0.51 mm).

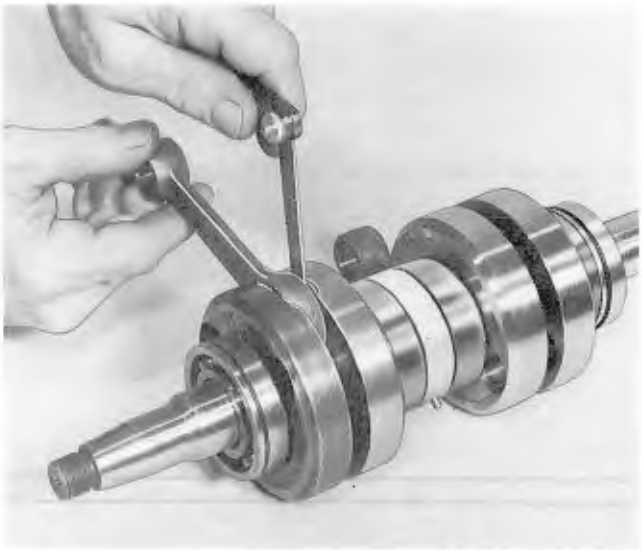

Figure 3-55

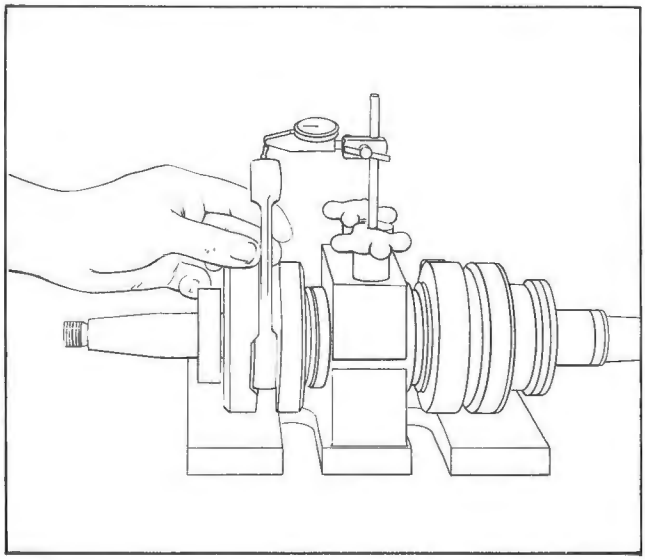

Figure 3-56

2. Check for excessive radial clearance of connecting rod big end by measuring the distance the connecting rod big end is moved up and down. Radial play should not exceed 0.0008-0.0012 in. (0.020-0.030 mm). (See Figure 3-56.)

3. Check that the connecting rod rotates freely on the crank pin through its entire 360° of movement. Any noticeable drag or grinding noise indicating the presence of foreign particles in the needle rollers or scoring of the rollers and crank pin will necessitate crankshaft assembly replacement.

Checking Connecting Rod Small End

Connecting Rod Small End Diameter

Standard (New)	Service Limit (Used)
0.7875 - 0.7880 in. (20.003 - 20.015 mm)	0.789 in. (20.05 mm)

Figure 3-57

Check connecting rod small end diameter by inserting a snap gauge into the rod small end bore. (See Figure 3-57.) Remove snap gauge and measure it using a 1 in. outside micrometer. Should the measured dimension be greater than the service limit specified, the crankshaft must be replaced.

Crankshaft End Play Determination

To check for proper crankshaft end play.

1. Position the RH crank shim, RH crankshaft bearing and RH washer onto crankshaft as shown in Figure 3-58.

2. Position the LH crank shim, LH crankshaft inner bearing, smaller LH crank shim, LH crankshaft outer bearing and LH washer onto crankshaft as shown in Figure 3-58.

3. Measure, where indicated in Figure 3-58, with a micrometer.

4. Refer to the tables for the correct shims and quantity to use.

Shims C1 are to be placed between the LH crank shim and the inner bearing. (See detail A Figure 3-58.)

Shims C2 are to be placed between the RH crank shim and the RH crankshaft bearing. (See detail B Figure 3-58.)

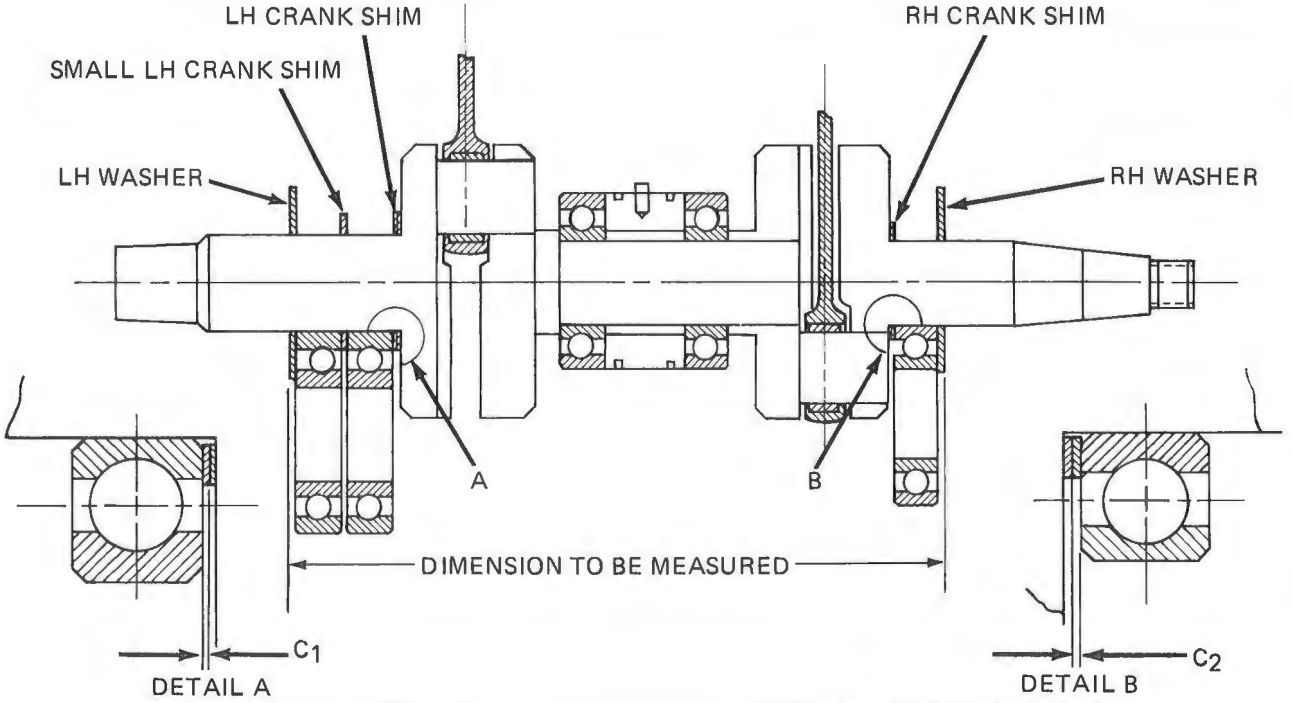

Measured Dimension	Shim to be used	
	C1 (Detail A)	C2 (Detail B)
9.3547 in. (237.61 mm)	0	0
9.3449 - 9.3543 in. (237.36 - 237.60 mm)	0	0
9.3390 - 9.3445 in. (237.21 - 237.35 mm)	(1)	0
9.3350 - 9.3386 in. (237.11 - 237.20 mm)	(2)	0
9.3311 - 9.3346 in. (237.01 - 237.10 mm)	(1)	(1)
9.3271 - 9.3307 in. (236.91 - 237.00 mm)	(2)	(1)
9.3232 - 9.3268 in. (236.81 - 236.90 mm)	(2)	(2)
9.3193 - 9.3228 in. (236.71 - 236.80 mm)	(3)	(1)
9.3153 - 9.3189 in. (236.61 - 236.70 mm)	(3)	(2)
9.3114 - 9.3149 in. (236.51 - 236.60 mm)	(3)	(1) + (1)
9.3075 - 9.3110 in. (236.41 - 236.50 mm)	(3)	(3)
9.3035 - 9.3071 in. (236.31 - 236.40 mm)	(2) + (2)	(3)
9.2996 - 9.3031 in. (236.21 - 236.30 mm)	(4)	(3)
9.2957 - 9.2992 in. (236.11 - 236.20 mm)	(2) + (3)	(3)
9.2917 - 9.2952 in. (236.01 - 236.10 mm)	(4)	(4)
9.2878 - 9.2913 in. (235.91 - 236.00 mm)	(2) + (3)	(4)
9.2838 - 9.2874 in. (235.81 - 235.90 mm)	(1) + (4)	(4)
9.2799 - 9.2834 in. (235.71 - 235.80 mm)	(5)	(4)
9.2760 - 9.2795 in. (235.61 - 235.70 mm)	(5)	(2) + (3)
9.2720 - 9.2756 in. (235.51 - 235.60 mm)	(5)	(1) + (4)
9.2689 - 9.2716 in. (235.43 - 235.50 mm)	(5)	(5)

Shim Description			
C1		C2	Thickness
92025-535	(1)	92025-515	0.00787 in. (0.2 mm)
92025-536	(2)	92025-521	0.01181 in. (0.3 mm)
92025-537	(3)	92025-525	0.01969 in. (0.5 mm)
92025-538	(4)	92025-528	0.02756 in. (0.7 mm)
92025-539	(5)	92025-532	0.03937 in. (1.0 mm)

Figure 3-58

Checking Crankshaft Runout

After new outer main bearings have been installed, crankshaft runout must be measured. Set the assembled crankshaft in V blocks with outer mains resting in blocks. Attach a dial indicator to read from the converter end of the crankshaft. (See Figure 3-59.) Slowly rotate the crankshaft noting the amount of indicator needle travel. Maximum runout should not exceed 0.002 in. (0.05 mm). Should runout exceed the specified maximum, the crankshaft must be replaced.

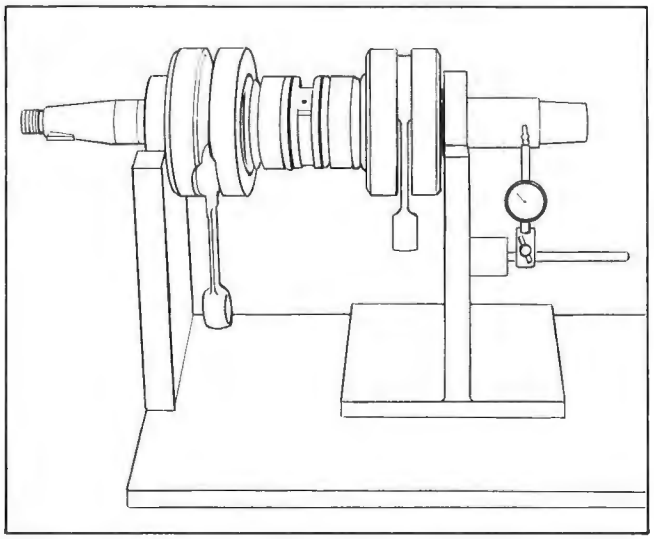

Figure 3-59

Installation

1. Oil all bearings.

2. Align crankshaft labyrinth seal aligning pin with recess in upper crankcase half and carefully insert crankshaft into crankcase. (See Figure 3-60.)

3. Install washers in crankcase grooves. Apply a coat of grease to inner section of oil seals and install oil seals to crankshaft.

CAUTION

When replacing bearings, crankshaft surface that oil seal contacts may be scratched which will cause excessive seal wear. Always remove any irregularities on the shaft surface using No. 400 emery cloth before installing new oil seals.

4. Apply crankcase sealer to lower crankcase half and carefully attach crankcase halves.

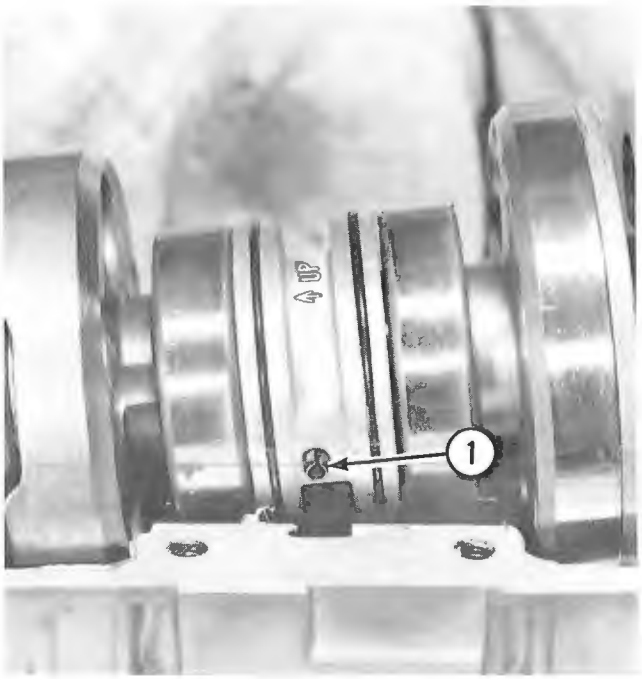

1. Aligning Pin

Figure 3-60

5. Secure crankcase halves using eleven bolts, lockwashers and washers. Tighten hardware evenly and in the sequence shown in Figure 3-61. Torque to 16 ft lb (2.21 kg-m).

NOTE: Apply torque in one third increments to prevent distortion of crankcase halves.

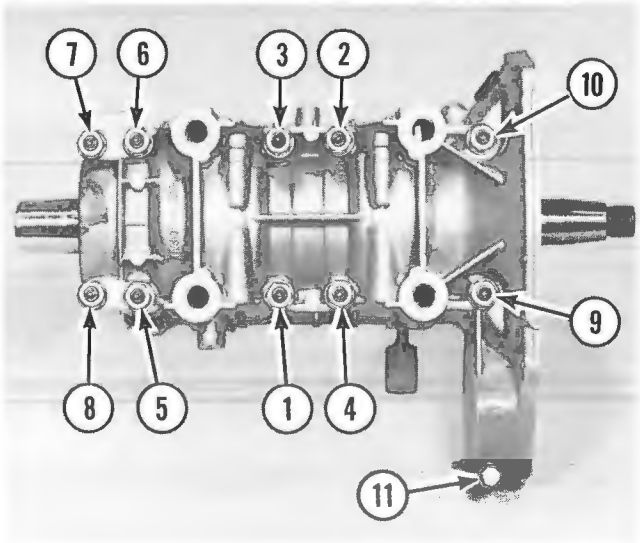

Figure 3-61

Brake Light Switch, Dimmer Switch, or Brake Lever Assembly

Removal

NOTE: Entire brake lever assembly must be removed to replace brake light switch or dimmer switch.

1. Remove brake cable from brake lever assembly.

2. Grasp the handle grip to be removed and hold thumb over end hole. Induce compressed air through end hole of opposite grip, and by twisting grip to be removed, slide it from the handlebar.

3. Remove brake and dimmer switch harness connectors from printed circuit board, and cable ties from handlebar.

4. Loosen lock screw and slide brake lever assembly from handlebar. (See Figure 3-62.)

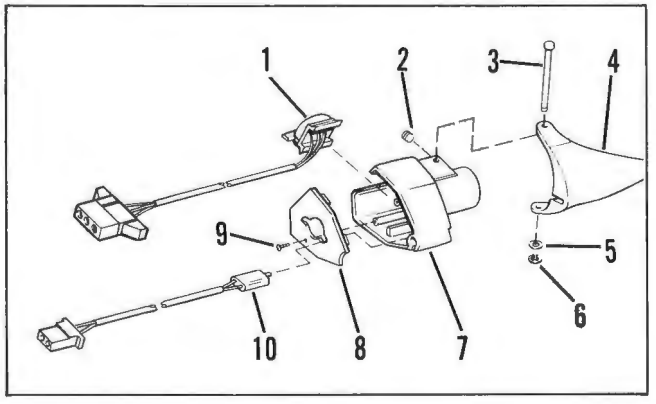

1. Dimmer Switch
2. Screw
3. Pin
4. Lever
5. Washer
6. Retainer
7. Case
8. Plate
9. Screw
10. Brake Light Switch

Figure 3-62

5. Remove retaining screw and case plate from case; slide switches from case.

6. Brake lever may be removed by removing pin retainer and washer, and withdrawing pin.

7. Reassemble reversing order of disassembly.

Installation

1. Install brake lever assembly on the handlebar in reverse order of removal. Tighten lock screw to 25 in. lb (0.278 kg-m).

2. Check brake lever adjustment as described in Section 2.

Emergency Stop Switch or Throttle Lever Assembly

Removal

NOTE: Entire throttle lever assembly must be removed to replace the emergency stop switch.

1. Remove the throttle cable from throttle lever assembly.

2. Grasp the handle grip to be removed, and hold thumb over end hole. Induce compressed air through end hole of opposite grip, and by twisting grip to be removed, slide it from the handlebar.

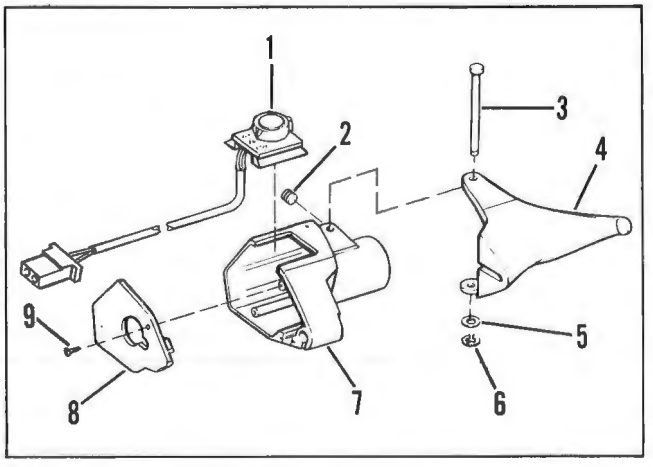

1. Emergency Stop Switch
2. Screw
3. Pin
4. Lever
5. Washer
6. Retainer
7. Case
8. Plate
9. Screw

Figure 3-63

3. Remove the emergency stop switch harness connector from the printed circuit board, and cable ties from handlebar.

4. Loosen lock screw and slide throttle lever assembly from the handlebar. (See Figure 3-63.)

5. Remove retaining screw and case plate from case; slide switch from case.

6. Brake lever may be removed by removing pin retainer and washer, and withdrawing pin.

7. Reassemble reversing order of disassembly.

Installation

1. Install throttle lever assembly on the handlebar in the reverse order of removal. Tighten lock screw to 25 in. lb (0.278 kg-m).

2. Check throttle lever adjustment as described in Section 2.

Headlamp

Removal

1. Remove wire harness assembly from bulb and remove capscrews, lockwashers, washers, and J-clip which secure headlamp housing to hood.

2. Remove headlamp gasket.

3. Disassemble headlamp as illustrated in Figure 3-64.

Installation

1. Reassemble headlamp in reverse order of removal. Tighten capscrews, lockwashers, washers, and J-clip.

2. Adjust headlamp in accordance with Section 2.

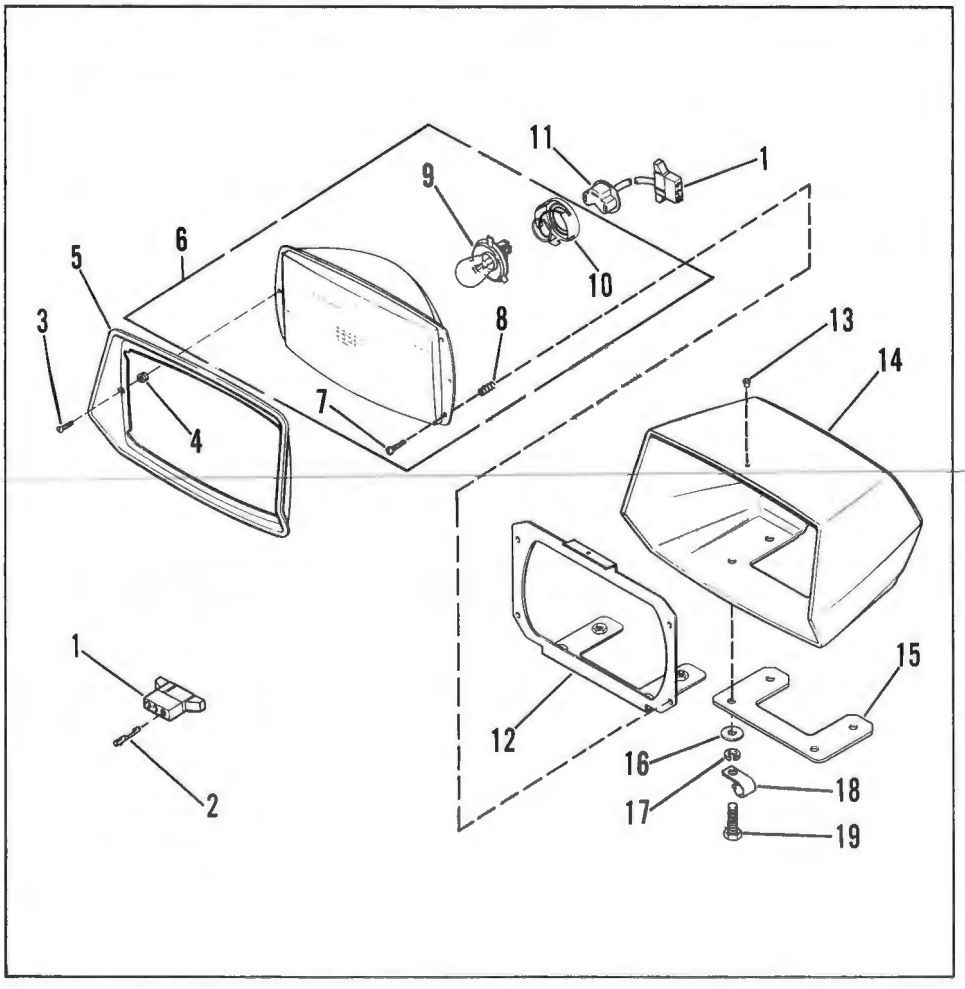

1. Socket Housing
2. Socket Connector
3. Machine Screw
4. Rubber Spacer
5. Headlamp Housing Rim
6. Lamp and Lens Assembly
7. Machine Screw
8. Adjusting Spring
9. Bulb
10. Bulb Retainer
11. Wiring Harness Assembly
12. Bracket Assembly
13. Rivet
14. Housing
15. Gasket
16. Washer
17. Lockwasher
18. J-Clip
19. Capscrew

Figure 3-64

Key Switch

Removal

1. Remove the face nut and wiring harness from the key switch and remove key switch from the console. (See Figure 3-65.)

Installation

1. Install key switch in the reverse order of removal. Hand-tighten the face nut.

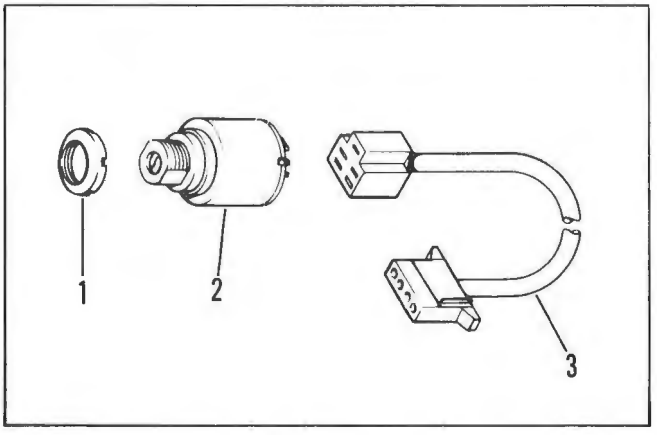

1. Face Nut
2. Key Switch
3. Wiring Harness

Figure 3-65

Tachometer

Removal

1. Slot the hole in the console, which the brake cable passes through. Remove the fuel cap from the fuel tank.

2. Remove screws securing console to the chassis, and pull out the console for access to the tachometer.

3. Remove the light bulb assembly from the tachometer, and disconnect wires from the tachometer.

4. Remove the tachometer bracket and remove the tachometer from the console.

Installation

1. Install the tachometer in reverse order of removal.

Printed Circuit Board Replacement

1. Disconnect all socket housings from printed circuit board. Remove rivets securing printed circuit board to the chassis.
2. Remove the printed circuit board and plate.
3. Install printed circuit board and plate in reverse order of removal.

WARNING

Indexing tab on connector must face upward for proper electrical polarity. Improper indexing may damage wiring harness or cause electrical sparks in the engine compartment.

Tail Lamp

Removal

1. Disconnect tail lamp socket housing from printed circuit board.
2. Remove the seat, sliding the tail lamp wiring harness through the console and seat cover. If necessary, clip the socket housing from the tail lamp wiring harness.
3. Remove the tail lamp lens and gasket. (See Figure 3-66.)

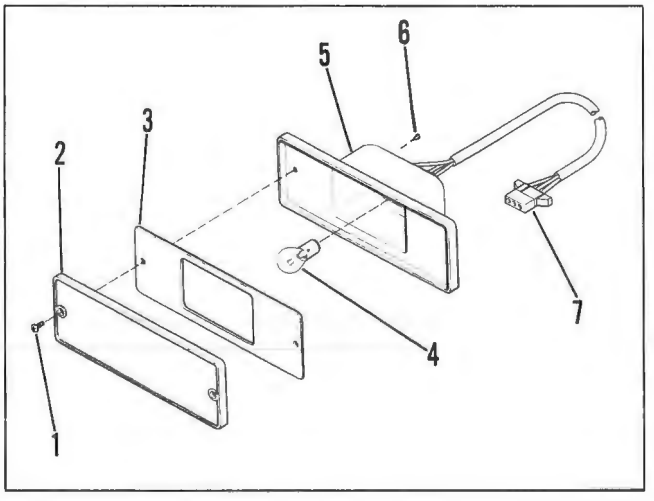

1. Screw
2. Lens
3. Gasket
4. Bulb
5. Back Assembly
6. Rivet
7. Socket Housing

Figure 3-66

4. Drill out the rivets securing tail lamp to the seat, and remove the tail lamp.

Installation

1. Install tail lamp assembly in the reverse order of removal. Secure tail lamp to seat with self-tapping screws.

2. Tighten seat assembly cap screws to 15 ft lb (2.07 kg-m) and console screws to 95 in. lb (1.09 kg-m).

Light Regulator Replacement

1. Disconnect light regulator socket housing from the printed circuit board.

2. Remove machine screw, lockwasher and locknut, and remove the light regulator.

3. Install light regulator in the reverse order of removal. Tighten machine screw to 95 in. lb (1.09 kg-m).

Throttle Cable

Removal

1. Unscrew the mixing body top assembly, and pull out the throttle slide valve assembly.

2. Compress the throttle spring and remove the spring seat plate.

3. Slide the throttle cable tip to the larger hole in the base of the throttle slide valve and separate the throttle cable from the throttle slide valve.

4. Loosen the throttle cable locknut and screw the throttle cable from the mixing body top assembly. (See Figure 3-67.)

5. Remove snap ring and disconnect the throttle cable end from the throttle lever. (See Figure 3-68.)

Installation

1. Slide the throttle cable through the throttle lever assembly and install the snap ring. (See Figure 3-68.)

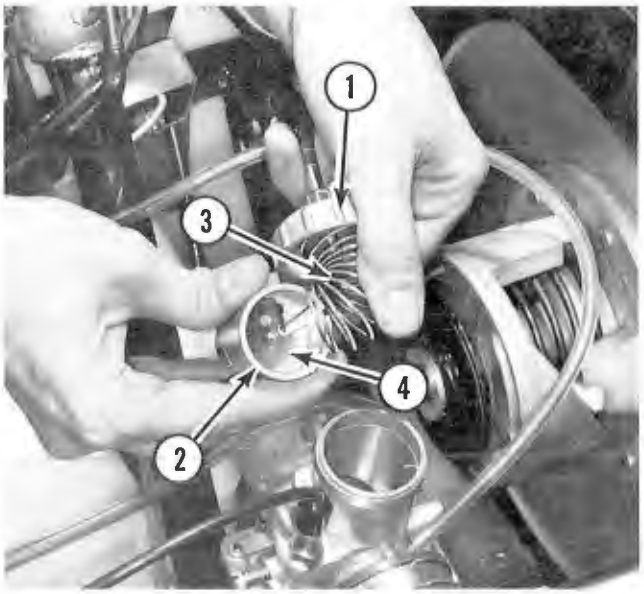

1. Mixing Body Top Assembly
2. Throttle Slide Valve Assembly
3. Spring
4. Spring Seat Plate

Figure 3-67

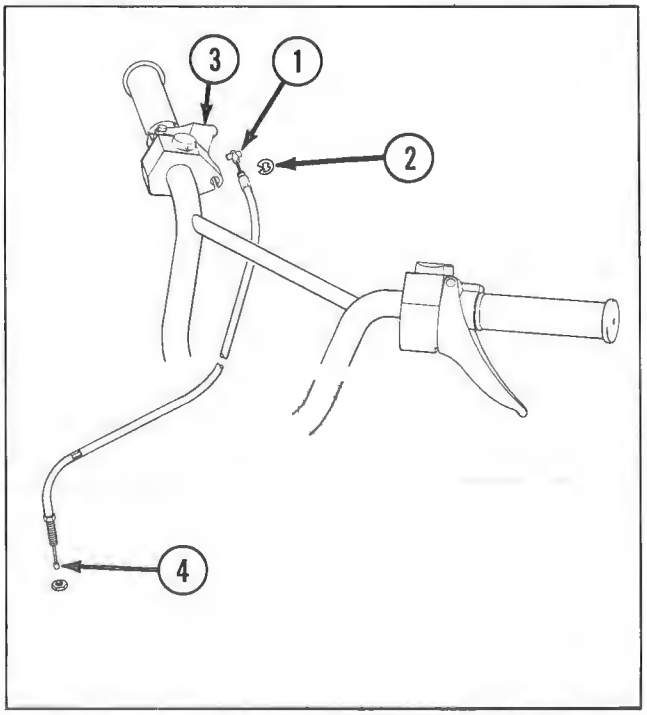

1. Throttle Cable End
2. Snap Ring
3. Throttle Lever
4. Throttle Cable Tip

Figure 3-68

2. Connect the throttle cable end to the throttle lever.

3. Screw the mixing body top assembly to the throttle cable.

4. Hold the throttle cable and mixing body top assembly in one hand. Place the spring in the top and compress the spring so the throttle cable extends beyond the spring.

5. Guide the throttle slide valve over the throttle cable. Insert the end of the cable through the hole in the throttle slide valve slot.

6. While keeping the spring compressed, release the throttle slide valve and install the spring seat plate. Then release the spring.

7. Install the throttle slide valve into the carburetor so the slot in the throttle slide valve mates with the locating pin in the throttle slide valve bore. Install the mixing body top assembly and tighten finger tight. Tighten the throttle cable locknut. Adjust the throttle control cable as described in Section 2.

Enrichener Cable

Removal

1. Unscrew the enrichener switch nut and separate the enrichener switch from the fuel tank cover. (See Figure 3-69.)

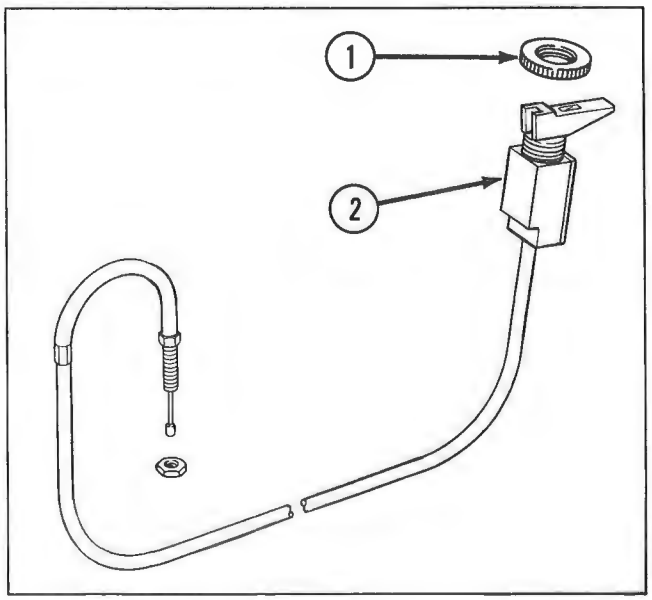

1. Enrichener Switch Nut
2. Enrichener Switch

Figure 3-69

2. Unscrew the enrichener plunger cap. (See Figure 3-70.) Remove the enrichener plunger assembly from the carubretor.

3. Unscrew the fitting, compress the enrichener plunger spring and disconnect the enrichener cable from the enrichener plunger assembly.

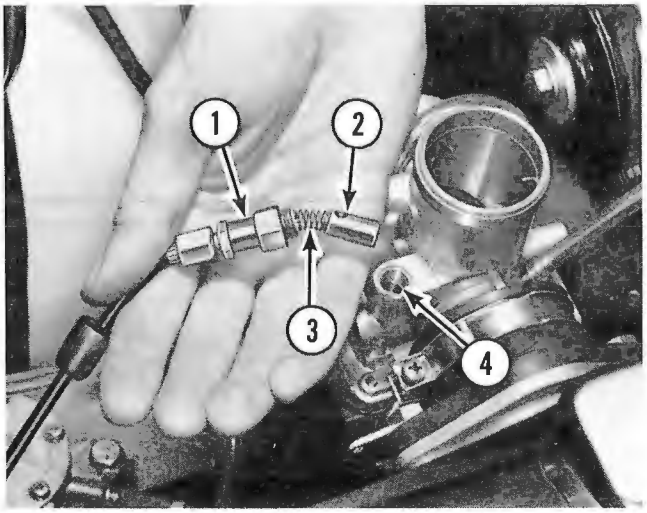

1. Enrichener Plunger Cap
2. Enrichener Plunger
3. Spring
4. Washer

Figure 3-70

Installation

1. Slide the enrichener switch through the hole in the fuel tank cover, and install the enrichener switch nut.

2. Slide the enrichener plunger cap, washer and spring over the end of the enrichener cable.

3. Place the hole in the enrichener plunger over the cable end and spring. Insert the plunger into the carburetor body and tighten the enrichener plunger cap. Bend washer against cap. Adjust the cable as described in Section 2.

Brake Cable

Removal

1. Compress the return spring and disconnect the brake cable tip from the retainer. (See Figure 3-71.)

2. Remove the locknuts from the brake cable.

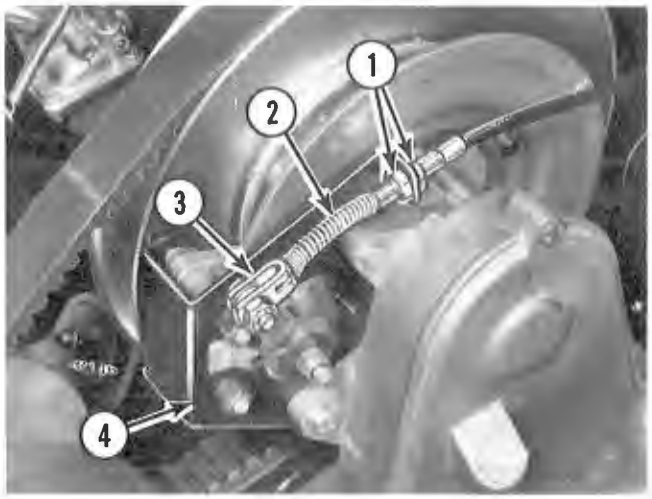

1. Locknuts
2. Return Spring
3. Retainer
4. Brake Support Bracket

Figure 3-71

3. Remove the snap ring and disconnect the brake cable end from the brake lever. (See Figure 3-72.)

4. Slot the hole in the console, through which the brake cable passes, to allow removal of the brake cable from the console.

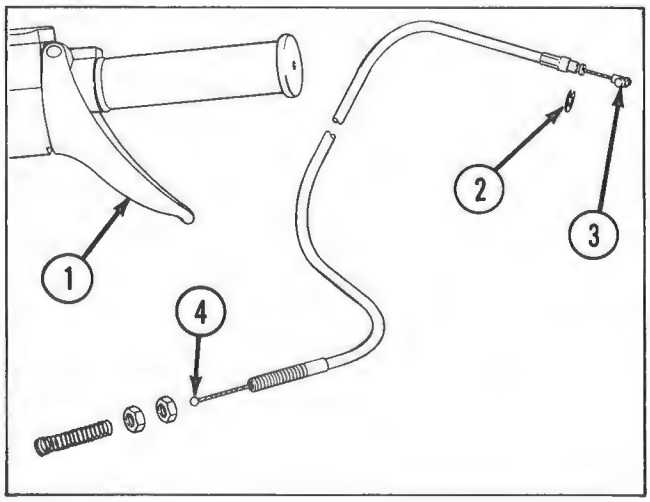

1. Brake Lever
2. Snap Ring
3. Brake Cable End
4. Brake Cable Tip

Figure 3-72

Installation

1. Place the end of the brake cable through the brake lever assembly and install the snap ring.

2. Connect the brake cable end to the brake lever.

3. Slide the other end of the brake cable through the hole in the fuel tank cover and the belt guard assembly. (See Figure 3-73.)

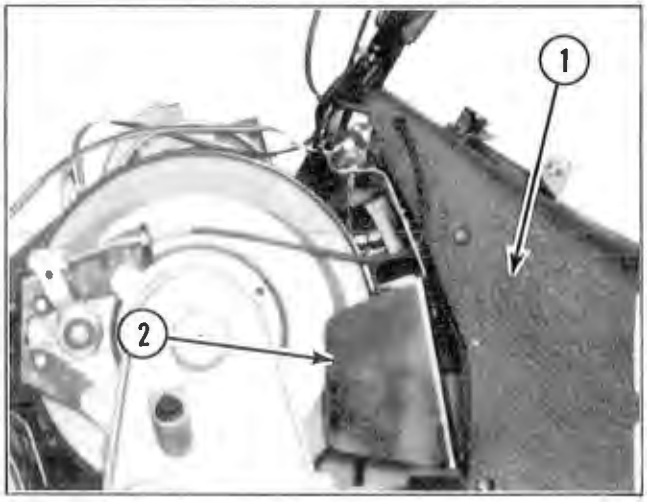

1. Fuel Tank Cover
2. Belt Guard Assembly

Figure 3-73

4. Install one locknut on the end of the brake cable and place it through the brake support bracket.

5. Install the second locknut and return spring on the end of the brake cable. Compress the spring and connect the brake cable tip to the retainer. For brake cable adjustment see Section 2. Squeeze the retainer to prevent the cable end from slipping out of the retainer slot.

Primer

Removal

1. Raise hood and disconnect fuel lines from primer pump noting position of tank-to-pump and pump-to-carburetor lines. (See Figure 3-74.)

2. Remove nut and internal star washer, and withdraw pump assembly through top of console.

NOTE: The primer pump is a non-serviceable item, requiring replacement as an assembly if any defect or malfunction is noted.

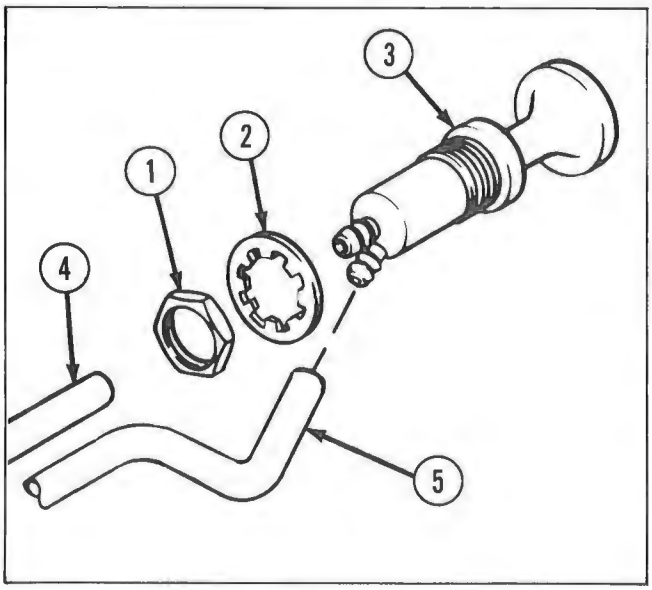

1. Nut
2. Washer
3. Pump
4. Line to Carburetor
5. Line From Fuel Tank T

Figure 3-74

Installation

1. Insert pump assembly in the console. Install internal star washer, and securing nut. Tighten to approximately 30 in. lb. (0.35 kg-m).

2. Reconnect fuel tank T to primer line to off-center nipple; primer-to-carburetor line to center nipple.

Drive Converter

Removal

1. Remove the drive belt.

2. Remove the drive converter mounting bolt and lockwasher.

3. Install the drive converter puller bolt (tool No. 205196) and screw in to remove the drive converter. (See Figure 3-75.)

Checking Drive Converter Wear

1. With the drive converter removed from the engine, remove the spring as described in steps 1 and 2 of the following disassembly procedure. Then reinstall the housing and bearing assembly.

1. Drive Converter Puller Bolt

Figure 3-75

2. Hold the stationary sheave securely and rotate the movable sheave counterclockwise as far as it will go. Scribe a line on the stationary and movable sheaves using a combination square as a guide as shown in Figure 3-76. Mark this line A.

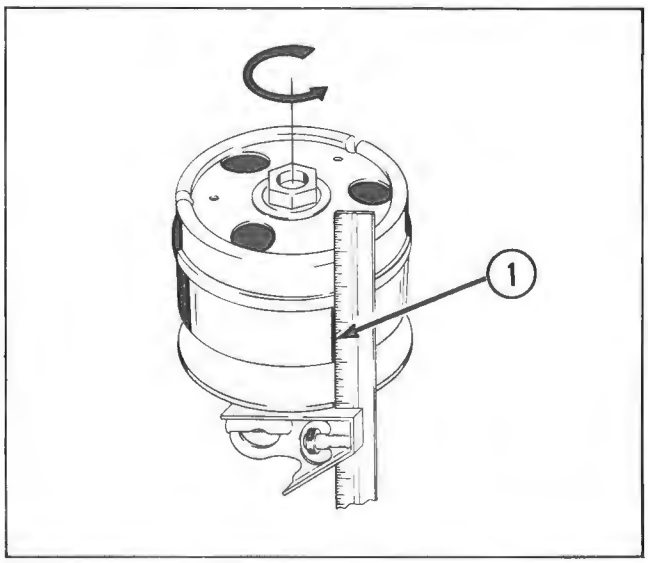

1. Line A

Figure 3-76

3. Now rotate the movable sheave all the way clockwise. Scribe a second line on the movable sheave in line with line A on the stationary sheave. (See Figure 3-77.)

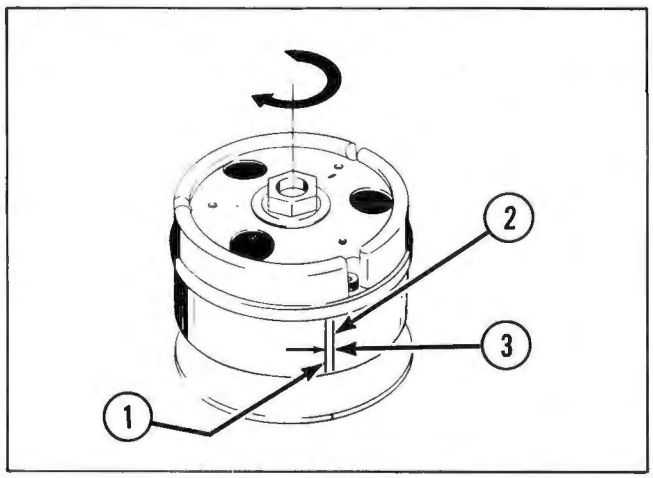

1. Line A
2. Line B
3. Dimension X

Figure 3-77

4. Measure the distance between the two lines on the movable sheave. If the difference is 0.156 in. (3.962 mm) or more, the drive converter is worn out of tolerance and must be replaced.

Disassembly

1. Loosen the three capscrews securing the housing and bearing assembly. Mark the housing and bearing assembly and the movable sheave for proper alignment. Carefully remove the capscrews while releasing spring tension on the housing and bearing assembly. Remove the housing and bearing assembly from the movable sheave.

CAUTION

Bearing and housing may be damaged if not carefully disassembled. Even minor damage to this bearing can make it unuseable.

2. Slide the spring and cup washer from the shaft.
3. Loosen three locknuts on the spider assembly. Back off the screws until the spider is free on the hex shaft.
4. Push the spider down against the movable sheave. If the spider does not slide easily, force down with a slight amount of pressure.
5. Remove the split ring from the hex shaft.
6. Mark the spider for correct alignment with the hex shaft and remove the spider.
7. Mark the movable sheave for correct alignment with the stationary sheave and remove the movable sheave.
8. To service the spider roller arm assembly, remove the capscrew and nut securing the roller arm weights and the roller. Remove the capscrew and ramp from the movable face.

Cleaning

1. Remove all grease and dirt by placing components in cleaning solvent. Dry parts with compressed air or a clean cloth.
2. Remove drive belt accumulations from the stationary sheave, movable sheave and hex bearing with cleaning solvent. Do not use steel wool or a wire brush on the hex bearing.
3. Remove rust and drive belt accumulations from the steel shaft of the stationary sheave with cleaning solvent or a fine grade of steel wool.

Reassembly

1. Position the ramp in the movable sheave. Secure with the capscrew and tighten capscrew to 24 to 30 in. lb (0.28 to 0.35 kg-m). (See Figure 3-78.)
2. Place the movable sheave on the hub of the stationary sheave, matching alignment marks on the movable sheave and stationary sheave.
3. If the spider roller arm assembly was serviced, align the slot in the bushing with the ears on the roller arm. Place the roller and bushing into the roller arm. Slide the weight onto the capscrew and start the capscrew into the roller arm. Slide the remaining roller arm weight on the capscrew and secure with the nut. Tighten the nut to 35 to 48 in. lb (0.40 to 0.55 kg-m).
4. Match the alignment marks on the spider assembly and hex shaft and slide the spider assembly onto the shaft.
5. Place split rings on the hex shaft.
6. Position the spider against the split rings. Tighten the three setscrews on the spider assembly to 36 to 48 in. lb (0.41 to 0.55 kg-m). Tighten the locknuts securely.
7. Place the cup washer and spring over the hex shaft.
8. Match alignment marks and place the housing and bearing assembly over the spring. Press down on the housing and bearing assembly to compress the spring. Hold in position while lifting up on the movable sheave. Secure the housing and bearing assembly to the movable sheave with three capscrews and tighten to 15 to 17 ft lb (2.07 to 2.35 kg-m).

Installation

Install the drive converter on the crankshaft and secure with a bolt and lockwasher. Tighten the bolt to 75 ft lb (10.37 kg-m). Install the drive belt.

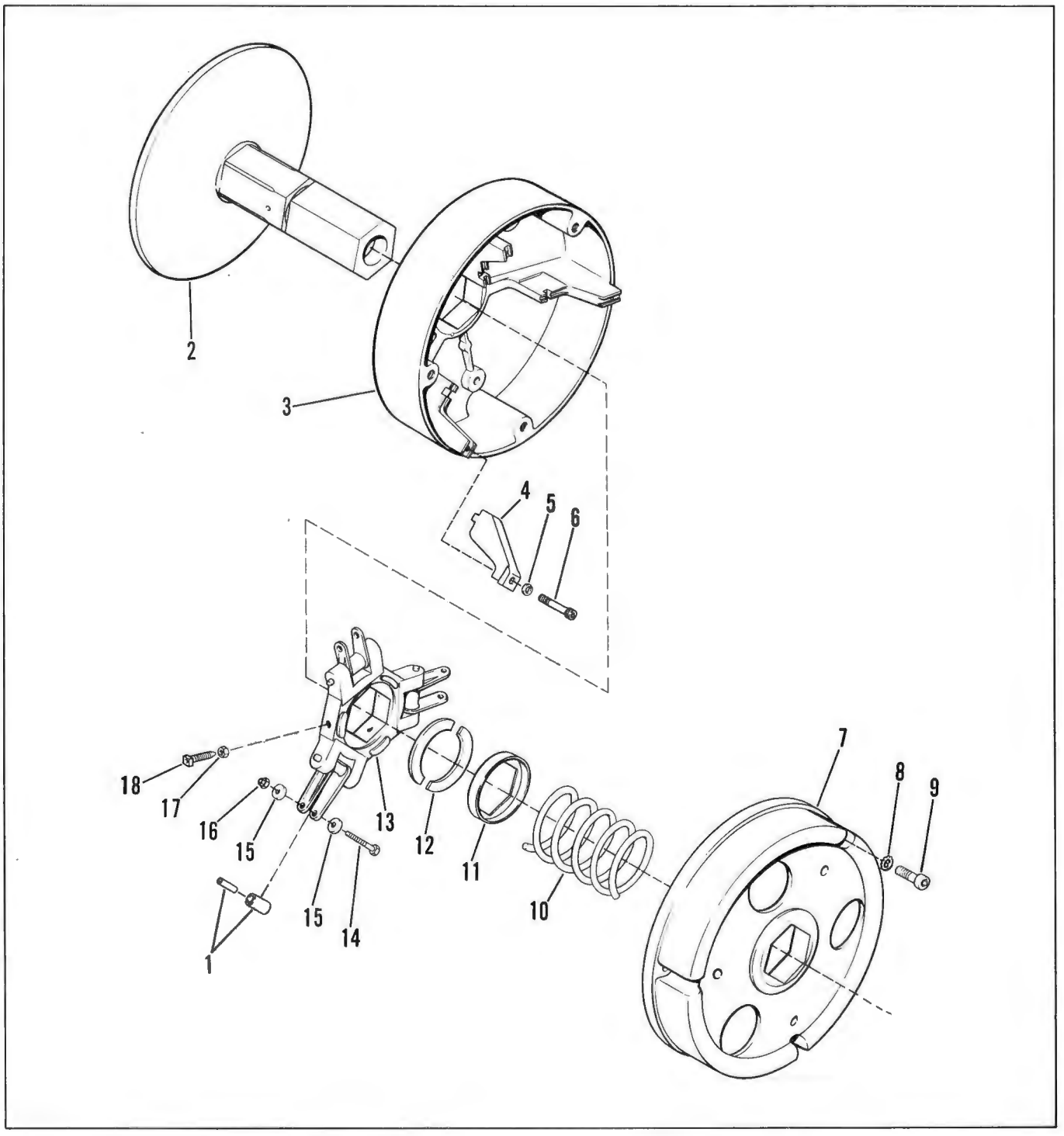

1. Roller Bearing
2. Stationary Sheave
3. Movable Sheave and Bearing Assembly
4. Ramp
5. Washer
6. Screw
7. Housing and Bearing Assembly
8. Washer
9. Screw
10. Spring
11. Washer
12. Split Ring
13. Spider Assembly
14. Screw
15. Weight
16. Nut
17. Nut
18. Screw

Figure 3-78

Driven Converter

NOTE: When repair of the driven converter is required, remove the chaincase and driven converter from the snowmobile as an assembly. See Chaincase Removal. Then disassemble the driven converter as follows.

Disassembly

1. Remove the screw, lockwasher, and flat washer securing bearing support to converter shaft. (See Figure 3-79.)
2. Use a puller to remove the bearing support assembly. Remove the spacer.
3. Hold the stationary sheave and turn the movable sheave so the shoe ramps do not contact the cam or torque bracket.
4. Force the torque bracket down on the shaft until it bottoms.

WARNING

Keep a downward pressure on the torque bracket and release spring tension slowly.

5. Remove the retaining ring, the torque bracket assembly, and driven spring.
6. Slide movable sheave from stationary sheave shaft. Remove the key and bushing.
7. Pull the shoe ramps from the hub of the movable sheave.
8. Remove three capscrews and separate the brake disc from the stationary sheave.

Cleaning and Inspection

1. Remove all foreign matter from the shoe ramps with a clean cloth and inspect for wear.
2. Place remaining components in cleaning solvent and remove all grease and dirt. Dry components with compressed air or a clean cloth.
3. Inspect sliding surfaces for wear and damage.
4. Inspect the fixed and movable faces for broken or loose rivets.
5. Check the torque bracket for cracks, wear and other damage.

Reassembly (See Figure 3-79.)

1. Position the shoe ramps on the movable face and tap into place using a rubber mallet.
2. Position the stationary sheave, bearing and movable sheave. Install key and slide parts together.
3. Position the driven spring over the stationary sheave and hook the turned down end into the hole in the movable face.
4. Position the torque bracket over the spring and hook the turned up end into the second hole of the torque bracket for standard spring tension.
5. Align the keyway in the torque bracket with the key. Push the torque bracket onto the shaft just far enough to contact the key. Hold the torque bracket in position. Turn the movable face counterclockwise until there is slight spring tension. Then turn the movable face an additional 120 degrees.
6. Push the torque bracket down on the shaft until it bottoms. Hold the torque bracket in position and install the retaining ring.
7. Release the torque bracket against the retaining ring.
8. Install the brake disc and secure with three cap screws. Use Loctite on screws and torque to 95 in. lb (1.09 kg-m).
9. Position the spacer key on the converter shaft. Install the assembled converter.
10. Position the spacer and press on the bearing support assembly.
11. Install flat washer, lockwasher and screw.
12. Install the chaincase in the snowmobile.

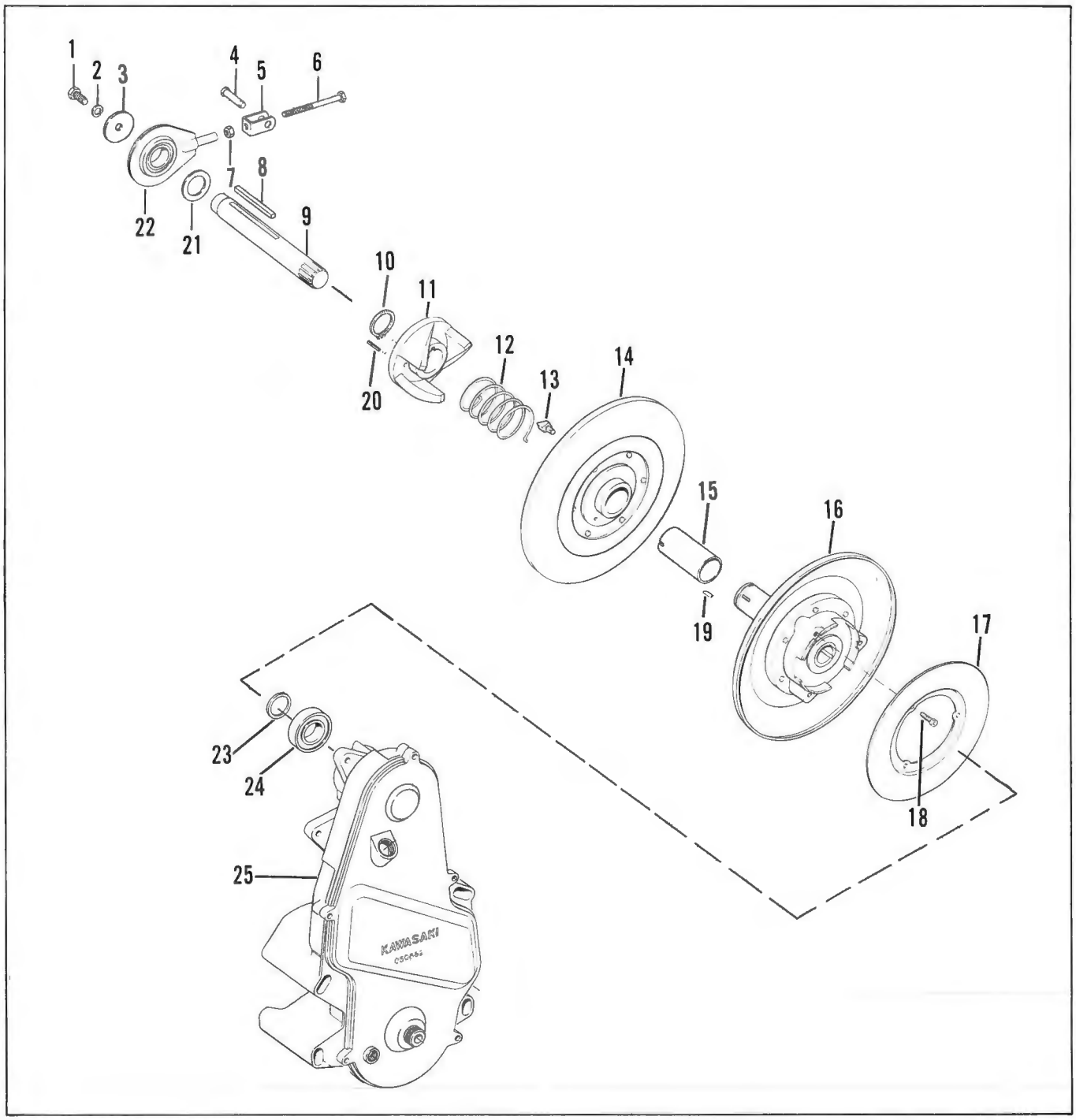

1. Bolt
2. Washer
3. Washer
4. Pin
5. Clevis
6. Bolt
7. Nut
8. Key
9. Shaft
10. Retaining Ring
11. Torque Bracket Assembly
12. Spring
13. Shoe Ramp
14. Movable Sheave
15. Bearing
16. Stationary Sheave
17. Brake Disc
18. Capscrew
19. Key
20. Pin
21. Spacer
22. Bearing Support Assembly
23. Spacer
24. Bearing Assembly
25. Chaincase Assembly

Figure 3-79

Chaincase

Removal

1. Remove retainer pin from bearing support clevis, and remove drive belt.

2. Remove bolts and nuts securing the brake caliper bracket to the chaincase, and lift the brake caliper assembly from the chaincase. (See Figure 3-80.)

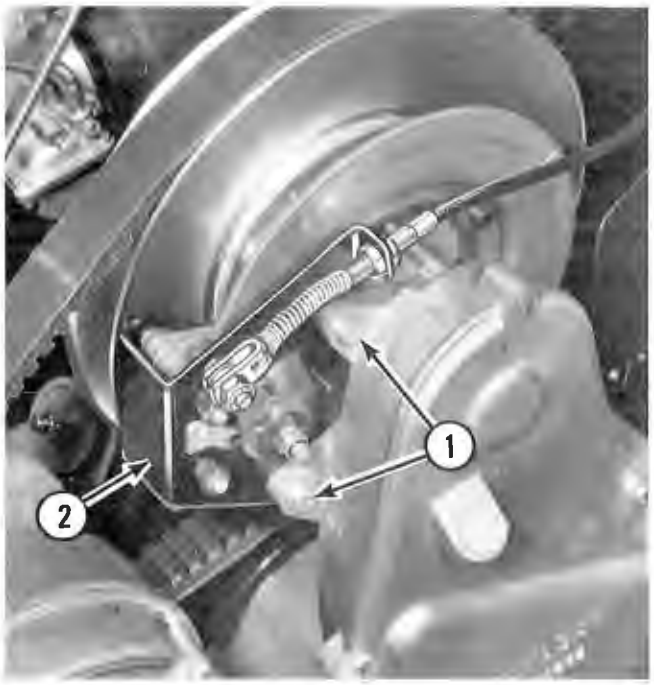

1. Bolts
2. Support Bracket

Figure 3-80

3. Remove chain cover and allow oil to drain into a clean container.

4. Remove chain tensioner spring from one of the tensioner arms, and the bolt and nut securing sprockets. (See Figure 3-81.) Remove the chain and sprockets from the splines on their respective shafts.

5. Remove the four locking nuts and washers from the through-bolts securing chaincase to chassis. (See Figure 3-82.) Pull the assembled chaincase and driven converter outward, disengaging from the track driveshaft and remove the chaincase.

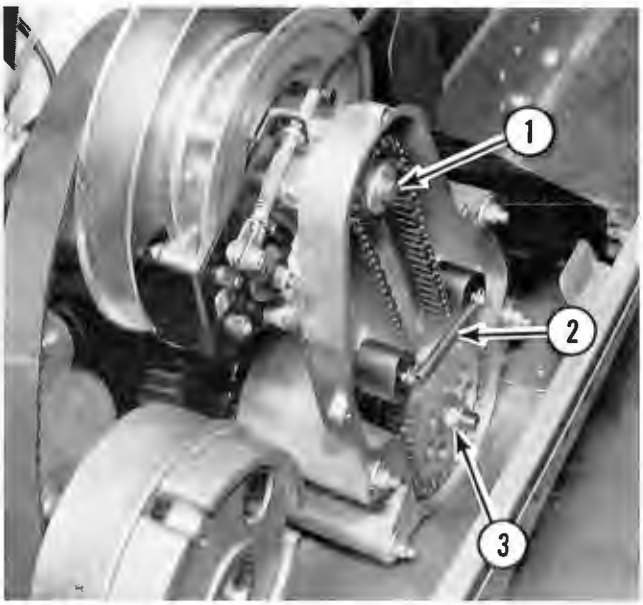

1. Bolt
2. Spring
3. Nut

Figure 3-81

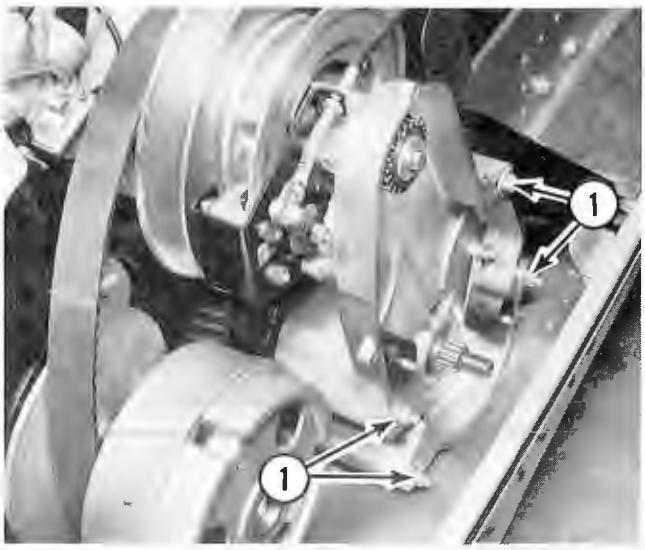

1. Nuts

Figure 3-82

Disassembly of the Chaincase

1. To remove the converter shaft, remove the driven converter, refer to Disassembly of the Driven Converter. Slide outer spacers from shaft. Drive converter shaft from the case with a soft mallet and drift, taking care not to damage shaft splines.

2. Clean metal parts in solvent, dry all components except bearings with compressed air. Allow bearings to air dry. Inspect bearings for scoring, binding during rotation, and radial play. Inspect sprockets and splined shafts for damaged teeth or splines. Replace damaged parts.

3. Should bearings require replacement, they may be removed by the following procedure. The case bosses for the converter shaft bearings have different diameters, the right-side boss having the larger measurement, the right-side bearing may have been removed with the shaft. If the bearing has remained in place, it will be necessary to heat the boss area of the case with a propane torch, and remove the bearing by alternately tapping on opposite sides of the inner race. Remove the remaining spacer. The left bearing may now be removed by pressing it out or by placing an appropriately sized drift against the inner race and tapping the bearing from the case with a hammer. Remove driveshaft bearing by first removing snap ring retainer, then pressing or tapping bearing from case.

4. Inspect chain and tensioner arm bushings for wear; replace if necessary.

Reassembly

1. Install driveshaft and left converter shaft bearings in case. Assemble snap ring retainer on driveshaft making sure it is properly seated in groove.

2. Install driven converter on driveshaft. Slide converter bearing spacer, bearing, and inner bearing spacer onto shaft. Slide shaft through left side bearing pressing the right side bearing into its boss. Be sure the bearings inner races are seated against the inner spacer. (See Figure 3-84.)

Installation

1. Install assembled case and converter in snowmobile, sliding driveshaft bearing over driveshaft, and secure case to chassis. Assemble four mounting nuts finger tight on through-bolts.

2. Install assembled brake caliper and support bracket to chaincase. Tighten mounting nuts to 120 in. lb (1.383 kg-m). (See Figure 3-80.)

3. Install chain tensioner arms, and replace chain guides if necessary.

4. Slide bearing to sprocket spacers onto shafts. Set sprockets in chain, and slide sprockets simultaneously onto shafts, rotating sprockets until they align with shaft splines. Apply Loctite and thread nut and bolt with proper washers to shafts. (See Figure 3-83.) Torque upper and lower sprockets to 28 ft lb (3.871 kg-m) and 55 ft lb (7.604 kg-m) respectively.

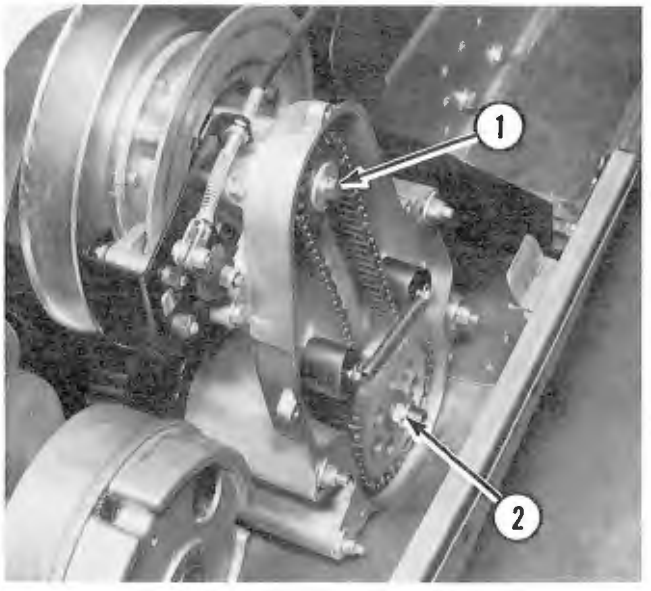

1. Bolt
2. Nut

Figure 3-83

5. Install chain tensioner spring and retaining hair pin clips.

6. Place O-ring gasket properly in cover. Apply a thin coating of sealer to the case's joint face and on cover gasket to hold it in place. Install chain cover. Add chain oil to lower edge of level hole.

7. Align converter as described in Section 2.

8. Install drive belt and adjust converter shaft bearing support assembly to install retainer pin through clevis and support brace.

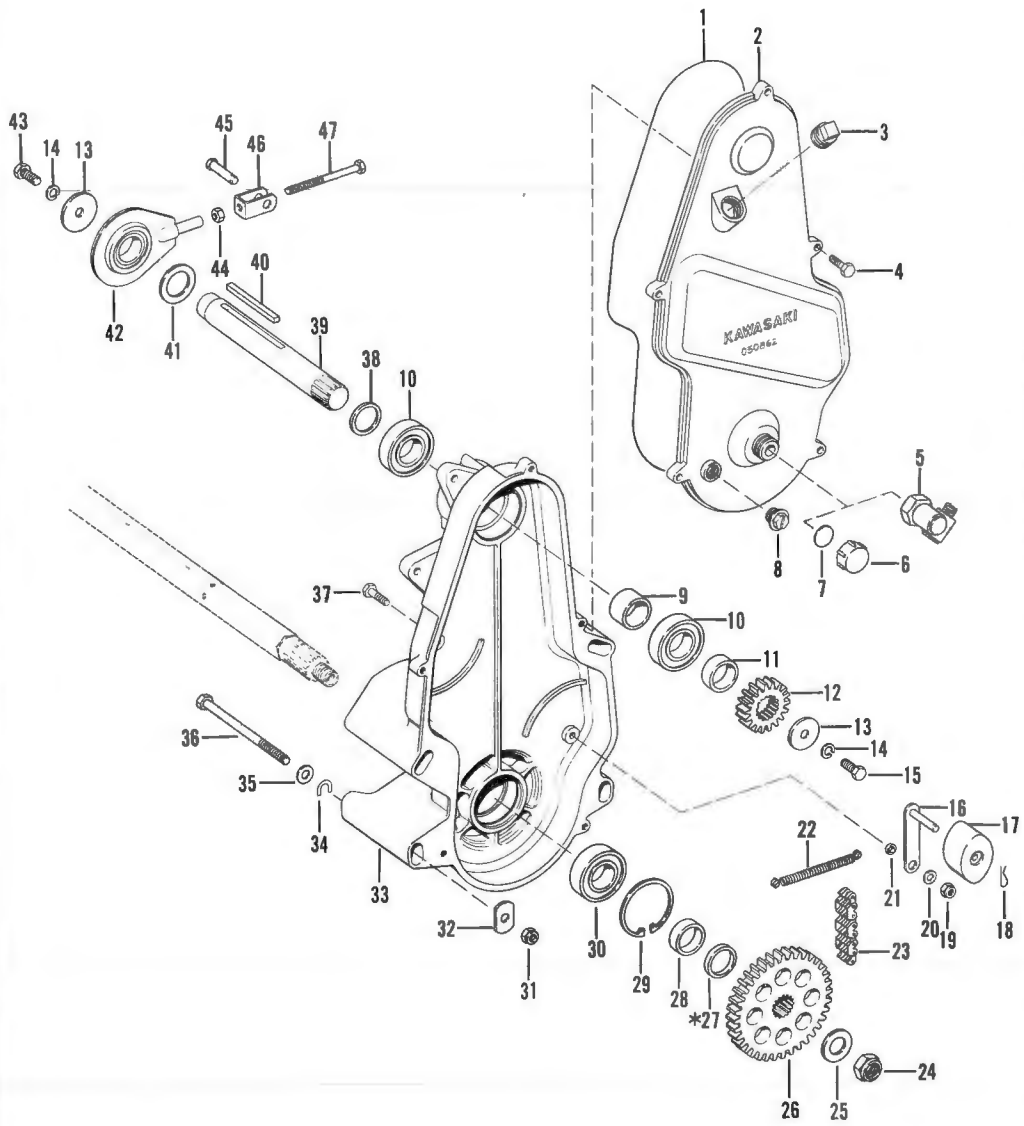

1. Gasket
2. Cover
3. Plug
4. Bolt
5. Adapter
6. Cap
7. Gasket
8. Plug
9. Spacer
10. Bearing Assembly
11. Spacer
12. Sprocket
13. Washer
14. Washer
15. Bolt
16. Tensioner Arm
17. Guide
18. Pin
19. Nut
20. Washer
21. Bushing
22. Spring
23. Chain
24. Jam Nut
25. Washer
26. Sprocket
*27. Spacer
28. Spacer
29. Ring
30. Bearing
31. Lock Nut
32. Washer
33. Chaincase Base
34. Washer
35. Washer
36. Bolt
37. Bolt
38. Spacer
39. Shaft
40. Key
41. Spacer
42. Bearing Support Assembly
43. Bolt
44. Nut
45. Pin
46. Clevis
47. Bolt

*Only required when original sprocket does not have a shoulder. DO NOT USE WITH REPLACEMENT SPROCKETS.

Figure 3-84

Brake Caliper

Removal

1. Disengage brake cable at the retainer by rotating the cam so the brake pads contact the disc, pull the spring back, and move cable end sideways from the retainer. Remove spring and forward-most locknut from the cable adjuster. Withdraw cable and adjuster from support bracket.

2. Remove the bolts and nuts securing the brake support bracket to the chaincase and lift brake assembly from chaincase. (See Figure 3-85.)

Disassembly

1. Remove the nut and washer and lift off the cam and spring. (See Figure 3-86.)

2. Remove two nuts, bolts, washers and bushings. Remove the brake support bracket.

3. Separate caliper B from caliper A and remove pad A and backup washer.

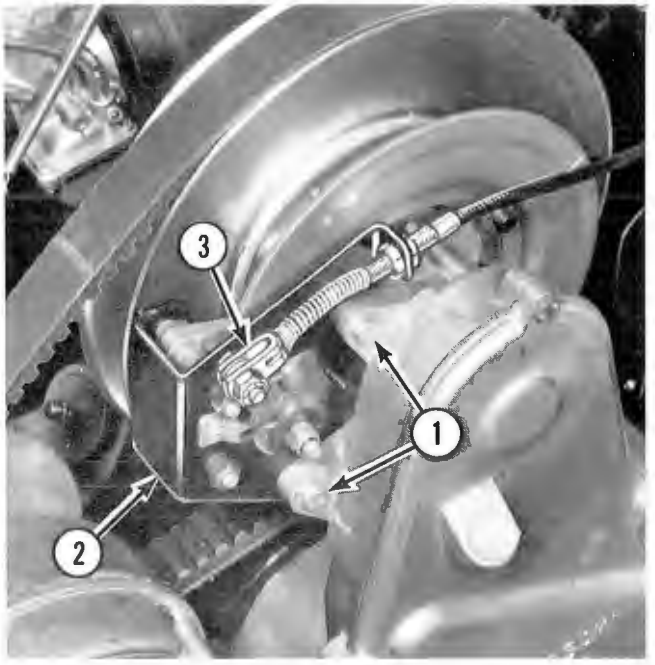

1. Bolts and Nuts
2. Brake Support Bracket
3. Brake Cable Retainer

Figure 3-85

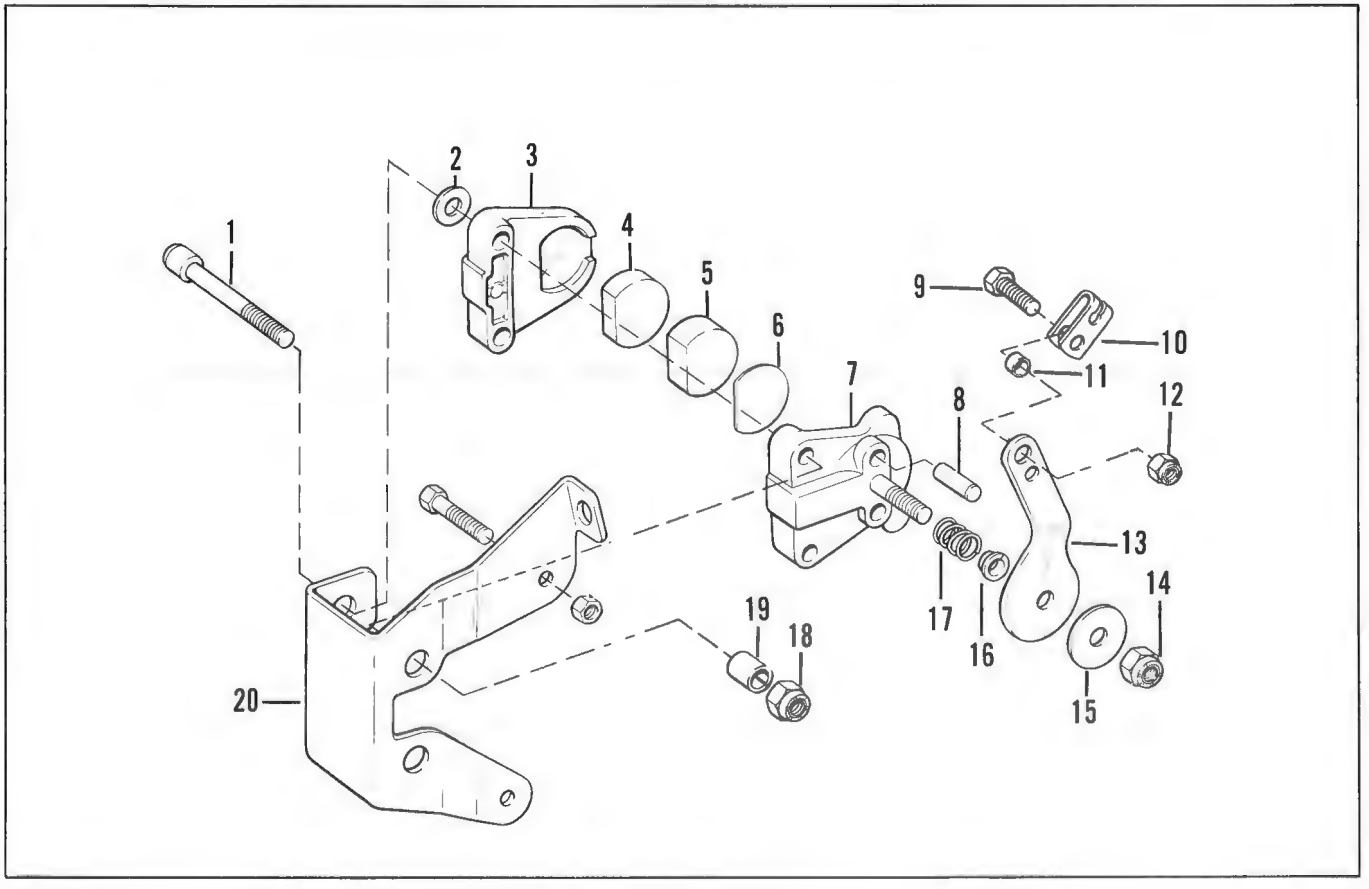

Figure 3-86

Repair

Inspect the brake pads for wear. If pad A is worn so only 1/32 in. (0.79 mm) protrudes from the caliper, replace pad A. Use contact cement to secure the new pad. If pad B is worn to 1/8 in. (3.18 mm), replace pad B.

Clean all parts in solvent. Be sure to keep oil and grease from the pads. Braking action will be impaired by oily or greasy pads.

Assembly

Apply coating of NEVER-SEEZ to push pins. Assemble and install brake caliper in the reverse order of removal and disassembly. Then adjust brake as instructed in Section 2.

Drive Chain Replacement

Removal

1. Remove the chaincase cover and drain oil from chaincase into a suitable container. Inspect the chain cover gasket, and discard if damaged.

2. Remove chain tensioner spring.

3. Remove lower sprocket retaining nut, upper sprocket retaining bolt and remove sprockets and chain. (See Figure 3-87.)

Installation

1. Install the upper sprocket, lower sprocket and the chain as a unit. Install the lower sprocket retaining nut. Torque nut 55 ft lb (7.61 kg-m). Apply Loctite to upper sprocket retaining bolt. Install large washer and lockwasher. Torque sprocket retaining bolt to 19 ft lb (2.63 kg-m). Inspect chain guides, and service as described in Section 2.

2. Install chain tensioner spring and retaining pins.

3. Place O-ring gasket properly in cover, applying a light coating of sealer to hold it in place. Install cover to chaincase, and add chain oil to the lower edge of the level hole.

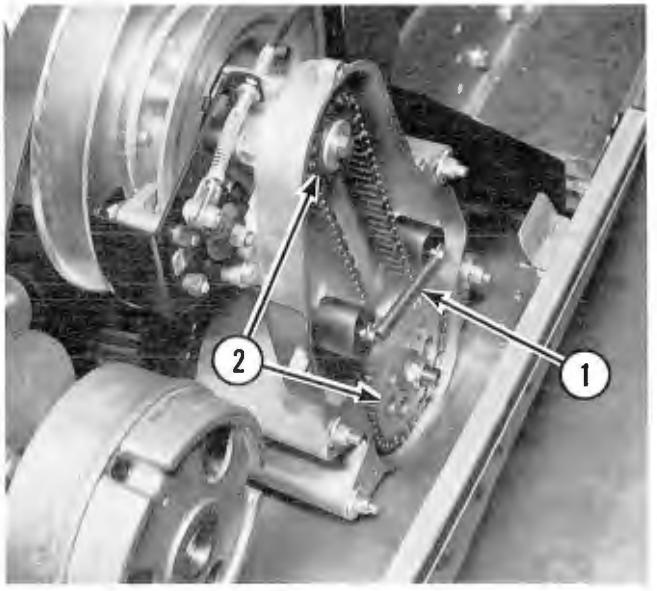

1. Chain Tensioner Spring
2. Sprockets

Figure 3-87

Slide Rail Suspension

Removal

1. Position the snowmobile on its right side, and loosen rear axle adjusting bolts to relieve track tension. (See Figure 3-88.)

2. Remove middle idler shaft, spacers, and wheels.

1. Bolt
2. Washer
3. Caliper A
4. Pad A
5. Pad B
6. Backup Washer
7. Caliper B
8. Push Pin
9. Bolt
10. Retainer
11. Bushing
12. Nut
13. Cam
14. Nut
15. Washer
16. Bushing
17. Spring
18. Nut
19. Bushing
20. Brake Support Bracket

Figure 3-86

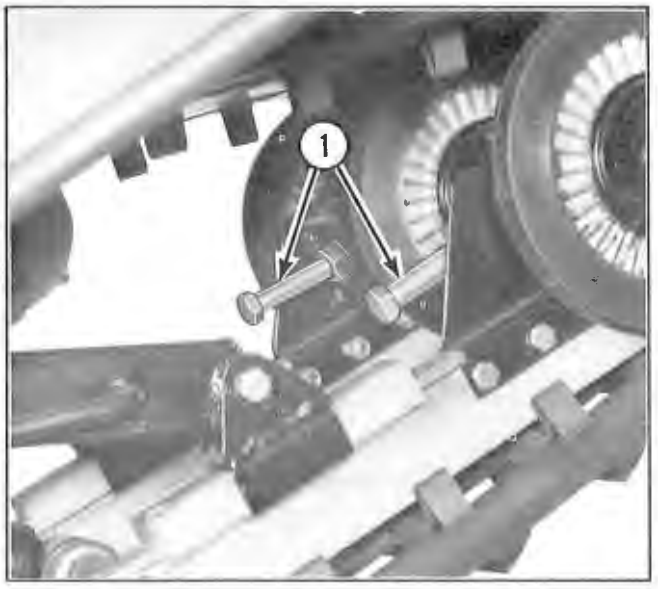

1. Rear Axle Adjusting Bolts

Figure 3-88

3. Relieve tension on rear suspension springs and remove bolts and nuts which secure the brackets and pivot shaft to the chassis. (See Figure 3-89.)

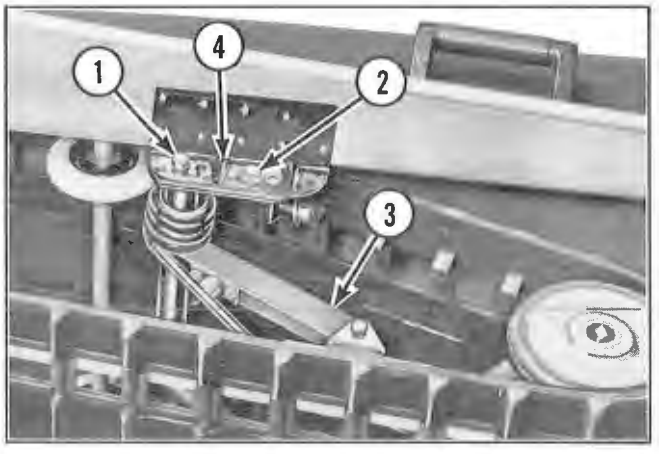

1. Pivot Shaft Bolt
2. Bracket Bolt and Nut
3. Rear Suspension Arm
4. Rear Suspension Bracket

Figure 3-89

4. Relieve tension on the front suspension arm springs by swinging suspension out of chassis. (See Figure 3-90.)

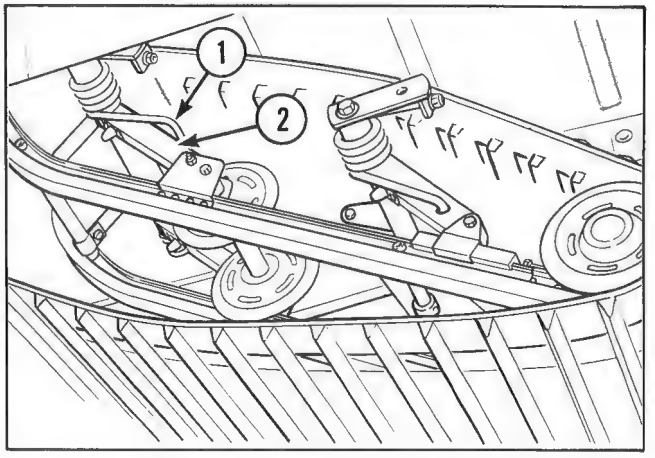

1. Front Spring
2. Front Suspension Arm

Figure 3-90

WARNING

The springs are held under high tension. To prevent injury, keep hands away from springs when releasing tension.

5. Remove bolts and nuts from front suspension brackets and pivot shaft. (See Figure 3-91.)

6. Remove slide rail suspension from track assembly.

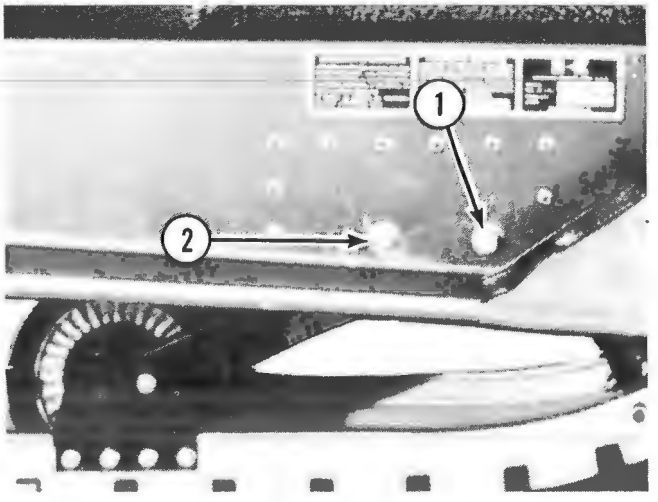

1. Bracket Bolt and Nut
2. Pivot Shaft Bolt

Figure 3-91

Inspection

Move slide rail suspension back and forth on a level surface to check for binding. (See Figure 3-92.)

If the suspension binds, locate the problem and refer to the appropriate repair procedure, below. Refer to Figure 3-93 for parts location and identification when repairing the suspension.

NOTE: The following repairs are performed with the slide rail suspension removed from the snowmobile.

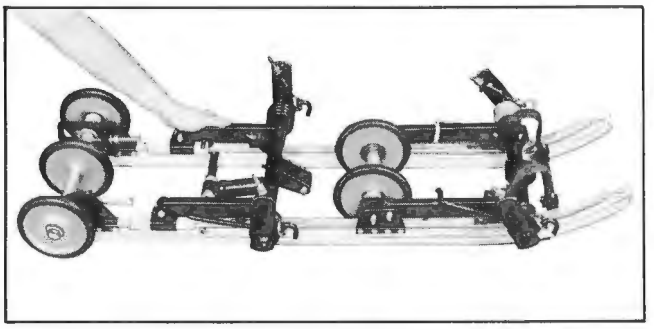

Figure 3-92

1. Rear Axle
2. Track Assembly
3. Track Clip
4. Rear Axel Wheel Spacer
5. Special Washer
6. Washer
7. Nut
8. Bolt
9. Nut
10. Rear Axle Support Bracket
11. Bolt
12. Retainer Assembly
13. Bushing
14. Wheel Assembly
15. Spacer
16. Wheel
17. Bearing
18. Snap Ring
19. Spacer
20. Washer
21. Bolt
22. Nut
23. Bolt
24. Washer
25. Suspension Bracket
26. Eye Bolt
27. Spring
28. Strip
29. Bolt
30. Screw
31. Bracket
32. Nut
33. Bushing
34. Shaft
35. Shaft
36. Shaft
37. Wheel
38. Spacer
39. Washer
40. Bolt
41. Bolt
42. Bolt
43. Spacer
44. Bracket
45. Rail
46. Washer
47. Bolt
48. Spring
49. Rail Wear Strip
50. Shield
51. Bolt
52. Washer
53. Limiter
54. Rivet
55. Bumper
56. Arm
57. Spacer
58. Shaft
59. Shock Absorber
60. Bushing
61. Collar
62. Set Screw
63. Bolt
64. Arm

Figure 3-93

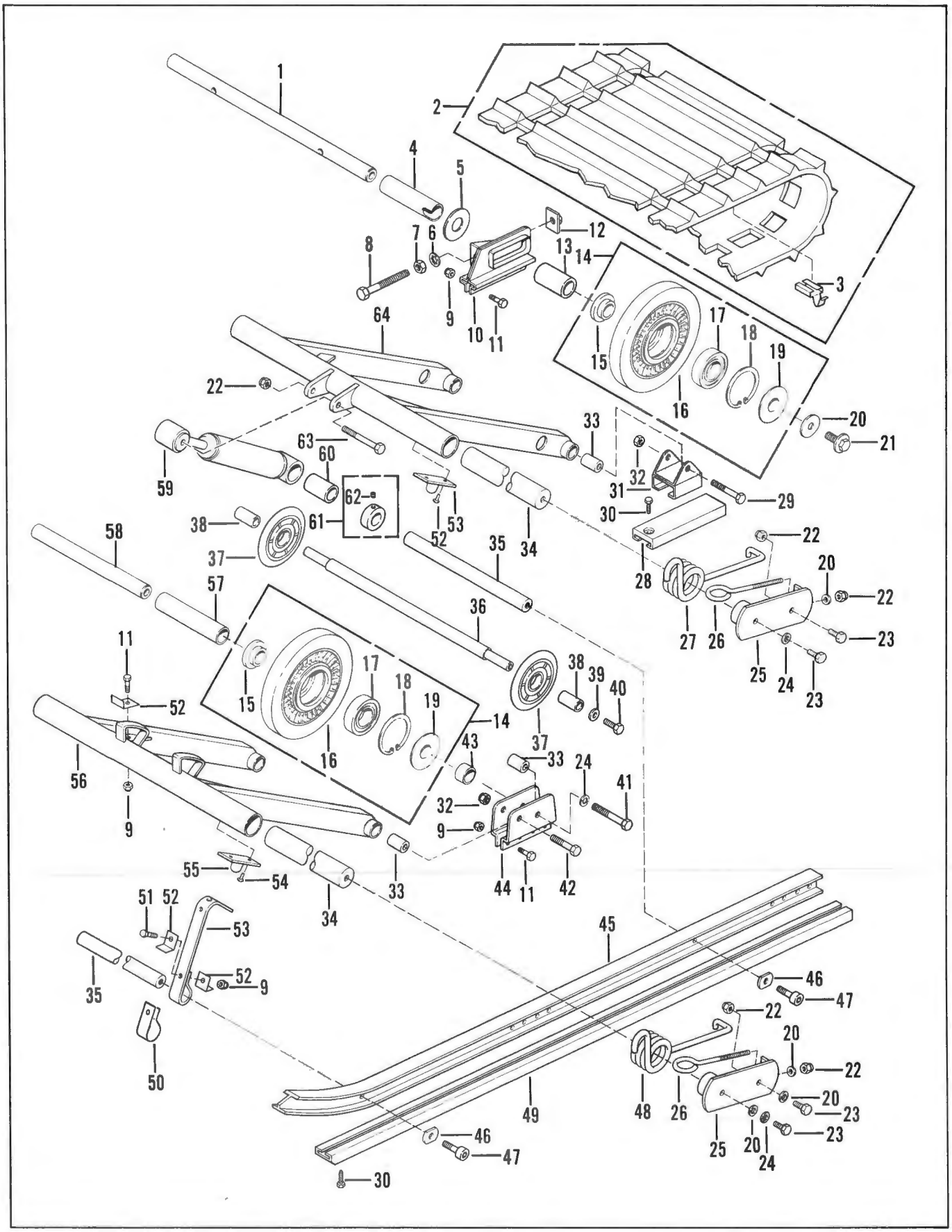
1
2
3
4
5
6
7
8
9
10
11
12
13
14
15
16
17
18
19
20
21
22
23
24
25
26
27
28
29
30
31
32
33
34
35
36
37
38
39
40
41
42
43
44
45
46
47
48
49
50
51
52
53
54
55
56
57
58
59
60
61
62
63
64

Figure 3-93

Front Idler Shaft and Wheels

Inspection

1. Replace front idler shaft wheel if rubber is excessively worn.

2. Spin wheels on the shaft and check for noise or binding. Replace bearings if necessary.

3. Inspect the shaft for damage.

Removal

Remove front idler shaft and wheels from the suspension by removing bolts and suspension bushings from the axle brackets. (See Figure 3-94.)

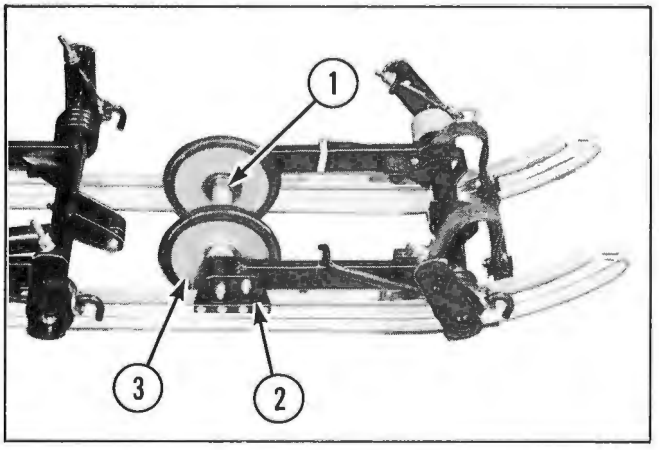

1. Front Idler Shaft
2. Axle Bracket
3. Idler Wheel

Figure 3-94

Disassembly

1. To remove idler wheel, remove bolt, washer, and spacers, and tap wheel assembly from the idler shaft.

2. To remove bearings, remove inner and outer wheel spacers, and wheel. Use a drift and tap bearings from wheels.

NOTE: To protect against wear, DO NOT allow dirt to enter bearings.

Reassembly and Installation

1. Reassemble bearings and wheels to idler shaft.

NOTE: To prevent bearing damage, press bearings onto the idler shaft - DO NOT tap them on.

2. Secure the idler shaft assembly and bracket bushings to axle brackets with long bolt. Tighten to 17 ft lb (2.35 kg-m).

Middle Idler Shaft and Wheels

1. Replace a cracked or excessively worn middle idler wheel.

2. Inspect the shaft for damage.

3. Inspect idler shaft spacers for damage and replace as required.

Limiters

Inspection

1. Inspect limiters for deterioration and damage. Replace as required.

2. Check the limiter cross shaft for distortion.

Removal and Disassembly

1. To remove limiter, remove bolts, washers, and nuts which secure it to the suspension arm and cross shaft. (See Figure 3-95.)

2. Remove bolts and washers which attach the limiter cross shaft to the suspension rails.

3. Slide limiter strap shields and limiter from the cross shaft.

Reassembly

1. Attach limiter to the front suspension arm with bolts and washers using hole farthest from end of strap. Tighten bolts to 95 in. lb (1.09 kg-m).

2. Secure limiter shield to limiter with a washer, bolt, and locknut. Do not tighten bolts completely.

3. Slide limiter cross shaft through the shields and limiter, and secure it to the suspension rail with washers and bolts. Use Loctite and tighten bolts to 30 ft lb (4.15 kg-m).

4. Tighten remaining limiter shield bolts to 95 in. lb (1.09 kg-m).

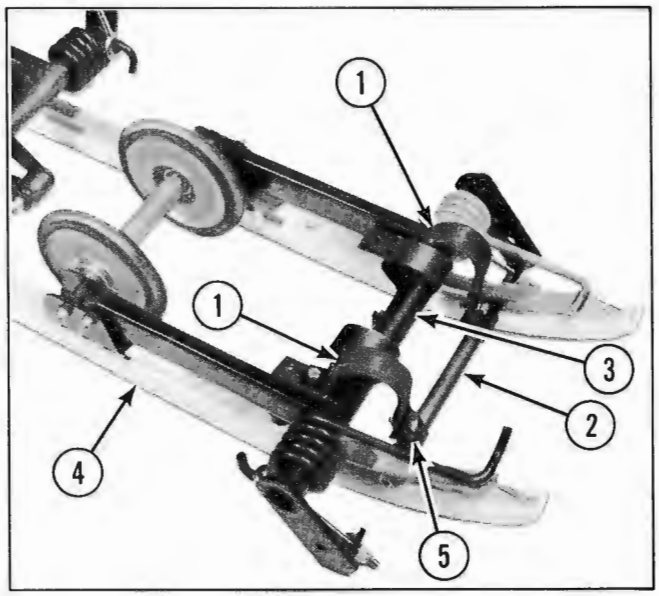

1. Limiters
2. Cross Shaft
3. Suspension Arm
4. Suspension Rail
5. Limiter Shield

Figure 3-95

Rail Wear Strips

Inspection

1. Check rail wear strips for cracks, distortion, and alignment with rail suspension.

2. Measure wear strip thickness. If rail strip is worn to 3/8 in. (9.5 mm) or less at any point, it must be replaced.

Removal

1. Turn slide rail suspension upside down, and brace it to prevent shifting.

2. Remove self-tapping screw from the top of the rail wear strip.

3. Tap the back of the wear strip with a block of wood and hammer as illustrated in Figure 3-96 to remove it from the suspension rail.

Installation

Install new rail wear strip by sliding it into position on the suspension rail. Secure with a self-tapping screw and tighten to 60 in. lb (0.69 kg-m).

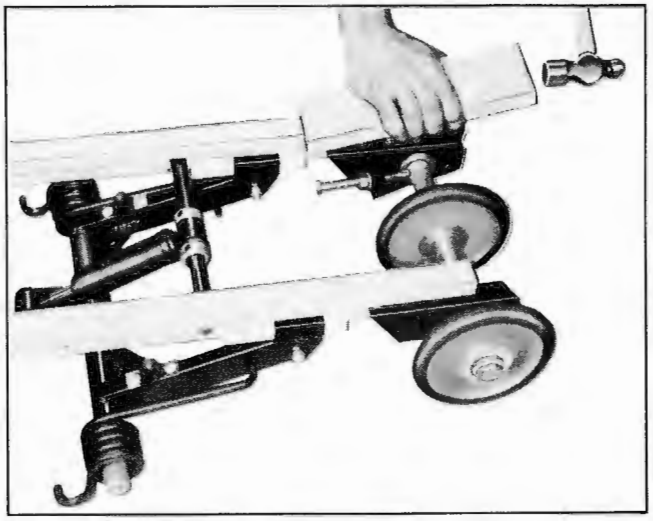

Figure 3-96

Rear Axle and Wheels

Inspection

1. Replace rear idler wheel if rubber is excessively worn.

2. Spin rear idler wheels on the shaft, and check for noise or binding. Replace bearings if necessary.

3. Inspect the shaft for damage.

Removal and Disassembly

1. Remove the eight bolts and nuts securing the rear axle support brackets to the suspension rails. (See Figure 3-97.)

2. Slide the brackets from suspension rail.

3. Remove bolts, washers, and spacers securing outside wheels. Remove assembled wheels and bearings by tapping with a plastic hammer.

4. Slide support brackets, spacers and nylon bushings from the axle shaft. Remove center wheel from shaft.

5. Wheel bearings are removed by removing retaining snap rings and tapping bearings out of wheels using a drift and hammer.

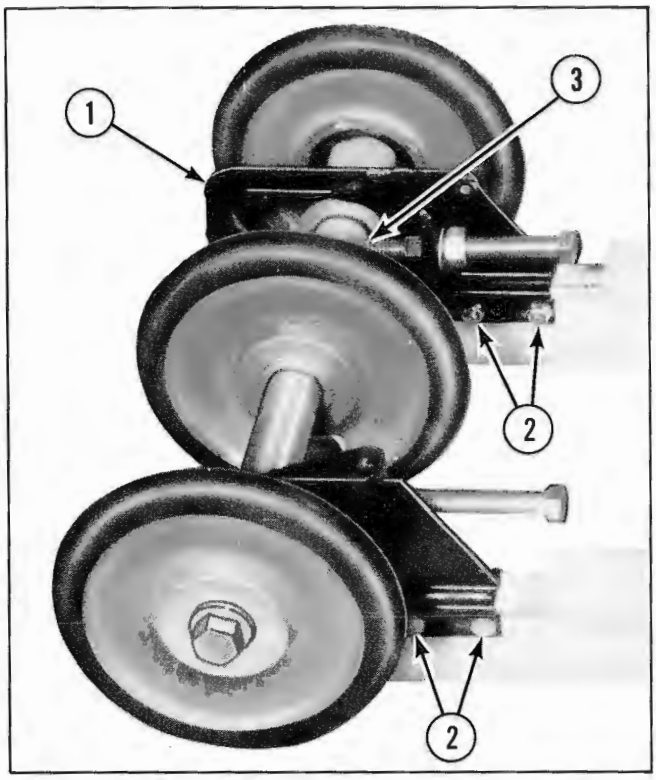

1. Rear Axle Support Bracket
2. Bolts and Nuts
3. End of Axle Adjusting Bolt

Figure 3-97

Reassembly and Installation

1. Reassemble rear axle and wheels reversing order of disassembly. Torque outer-wheel securing bolts 30 ft lb (4.148 kg-m).

CAUTION

Ends of axle adjusting bolts must be seated in the corresponding axle holes to prevent misalignment and subsequent track damage.

2. Secure rear axle support brackets to the suspension rails with bolt and locknuts. Tighten the bolt to 95 in. lb (1.09 kg-m).

Shock Absorber

Inspection

1. Examine shock absorber shaft for warpage.

2. Examine shock absorber for leakage and cracked or worn rubber.

Removal and Disassembly

1. Remove the bolt and nut which secure the shock absorber top to the suspension arm. Loosen only one collar. (See Figure 3-98.)

2. Remove shock absorber shaft by removing bolts and washers from the suspension rails.

3. Remove collar, shock absorber, and bushing from the shaft.

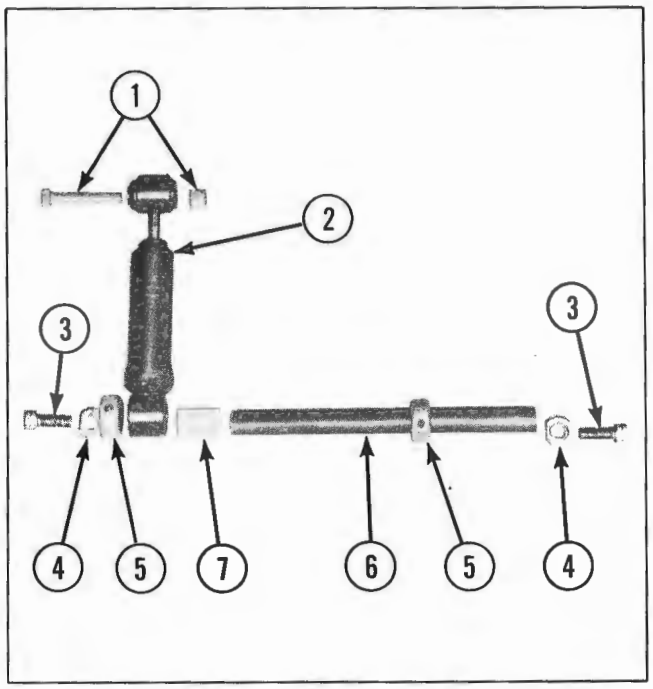

1. Bolt and Nut
2. Shock Absorber
3. Bolt
4. Washer
5. Collar
6. Shaft
7. Bushing

Figure 3-98

Reassembly and Installation

1. Reassemble shock absorber to shaft and to the chassis in the reverse order of removal. Place Loctite on all bolts.

2. Tighten bolt and nut which secure shock absorber to the suspension arm to 30 ft lb (4.15 kg-m), and tighten bolts and washers which secure the shaft to the suspension rail to 30 ft lb (4.15 kg-m).

Front and Rear Springs

Inspection

1. Check eye bolts for distortion or wear. (See Figure 3-99.)

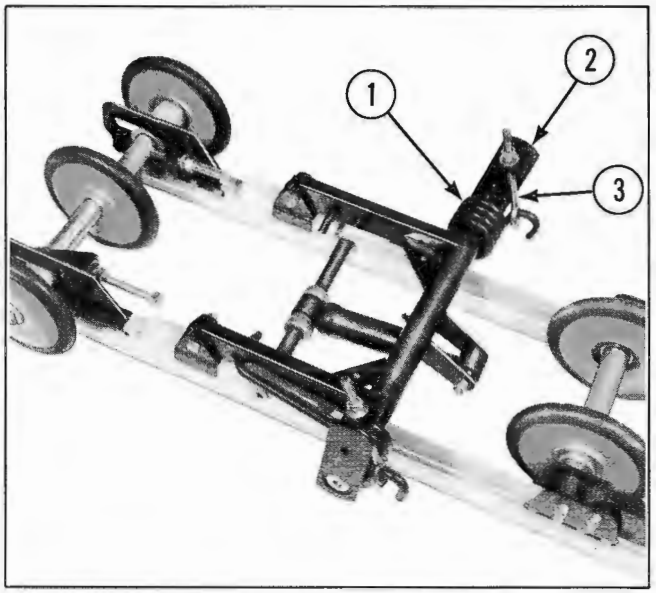

1. Spring
2. Suspension Bracket
3. Eye Bolt

Figure 3-99

2. Replace a distorted spring or spring arm.

3. Examine suspension brackets for bends. Straighten or replace if necessary.

Removal

Remove the suspension brackets, eye bolts, and springs by sliding from the pivot shafts.

Installation

Install the suspension brackets, eye bolts, and springs in the reverse order of removal.

Front and Rear Suspension Arms

Inspection

1. Examine suspension arms for bends. Replace if necessary.

2. Rotate the pivot shaft. If there is binding of the shaft, lubricate it with a low temperature, extreme pressure (E P) grease. Replace suspension arm and pivot shaft if binding persists.

3. Replace worn bumpers.

Front Suspension Arm Removal

1. Remove springs, eye bolts, and suspension brackets from suspension arm and remove all bolts, nuts, and washers which secure the arm to the suspension rails and limiters. (See Figure 3-100.)

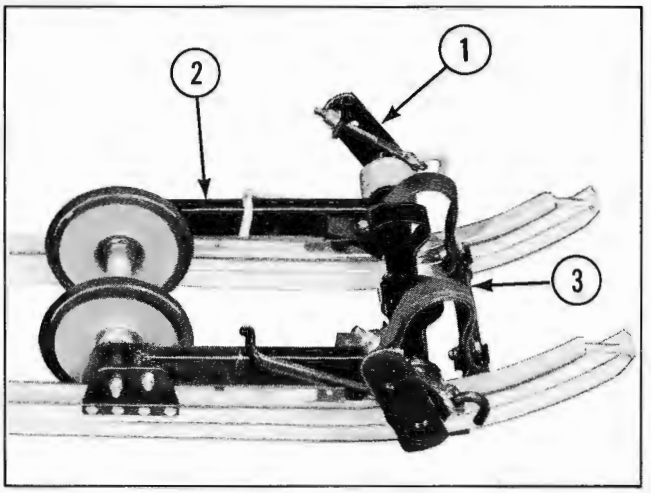

1. Spring, Eyebolt, and Suspension Bracket
2. Suspension Arm
3. Limiter

Figure 3-100

2. Remove the limiters.

3. Remove suspension arm.

Rear Suspension Arm Removal

1. Remove springs, eye bolts, and suspension brackets from suspension arm. (See Figure 3-101.)

2. Remove shock absorber.

3. Remove all bolts, nuts, and washers which secure the arm to the suspension rails.

4. Remove suspension arm.

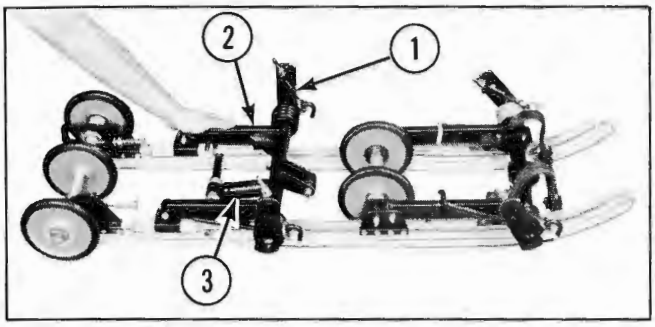

1. Spring, Eyebolt, and Suspension Bracket
2. Suspension Arm
3. Shock Absorber

Figure 3-101

Installation

1. Install the front and rear suspension arms in the reverse order of removal. Tighten bolts and nuts which attach the arms and suspension brackets to 17 ft lb (2.35 kg-m).

2. Install shock absorber.

3. Install limiters.

Suspension Rails

Inspection

Inspect suspension rails for distortion and damage.

Removal

1. Remove rail wear strips.

2. Remove all bolts, nuts, screws, and washers which secure suspension rails to the suspension, and slide out the rails from the suspension.

Installation

1. Reassemble suspension rails in the opposite order of removal. Tighten bolts which attach rails to the limiter cross shaft to 30 ft lb (4.15 kg-m). Apply Loctite to cross shaft capscrews. Tighten bolts and nuts which attach rails to the axle brackets and rear axle support brackets to 95 in. lb (1.09 kg-m).

2. Install rail wear strips. Tighten screw to 60 in. lb (0.69 kg-m).

Wear Strips (Rear Suspension Arm)

Inspection

Replace wear strip if damaged.

Removal

1. Remove bolts and nuts which secure rear axle support brackets to suspension rail, and slide off rear axle assembly. (See Figure 3-102.)

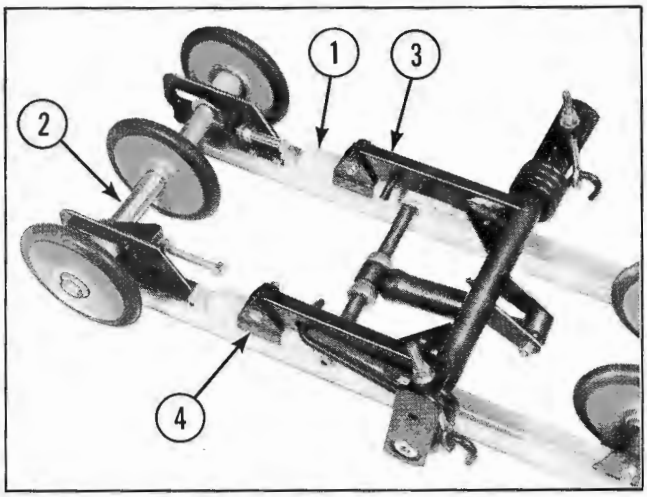

1. Wear Strip
2. Rear Axle Assembly
3. Rear Suspension Arm
4. Rear Suspension Bracket

Figure 3-102

2. Remove screws attaching wear strips to rail suspension.

3. Remove rear suspension arms from rear suspension brackets.

4. Drive wear strips from rail suspension, using wood block and hammer. (See Figure 3-96.)

Reassembly

Reassemble the wear strips in reverse order of removal. Tighten the bolts which secure rear axle brackets to 95 in. lb (1.09 kg-m), bolts and nuts which support the suspension arm to rear suspension brackets to 15 ft lb (2.07 kg-m), and the wear strip screws to 60 in. lb (0.69 kg-m).

Installation of Slide Rail Suspension

1. On front suspension arm, position spring arms toward suspension rail. Secure suspension brackets, eye bolts, and springs to suspension arms with large rubber bands.

2. With the snowmobile on its right side, insert middle idler shaft, spacer, and wheels between track. Secure shaft to chassis with flat washers and bolts, and tighten to 15 ft lb (2.07 kg-m).

3. Slide suspension between the track, and align pivot shafts with the chassis and suspension bracket. Secure pivot shafts with flat washers, lockwashers, and bolts. Remove rubber bands. Do not tighten bolts completely.

4. Align both front suspension brackets with the front chassis. Secure bracket to chassis with flat washers, locknuts, and bolts. Tighten screws to 25 ft lb (3.46 kg-m).

5. Brace each rear suspension bracket, and align it with chassis rear suspension bracket. Secure bracket to chassis with bolts and locknuts. Tighten these bolts and pivot shaft bolts to 25 ft lb (3.46 kg-m).

6. Adjust the track and suspension in accordance with Section 2.

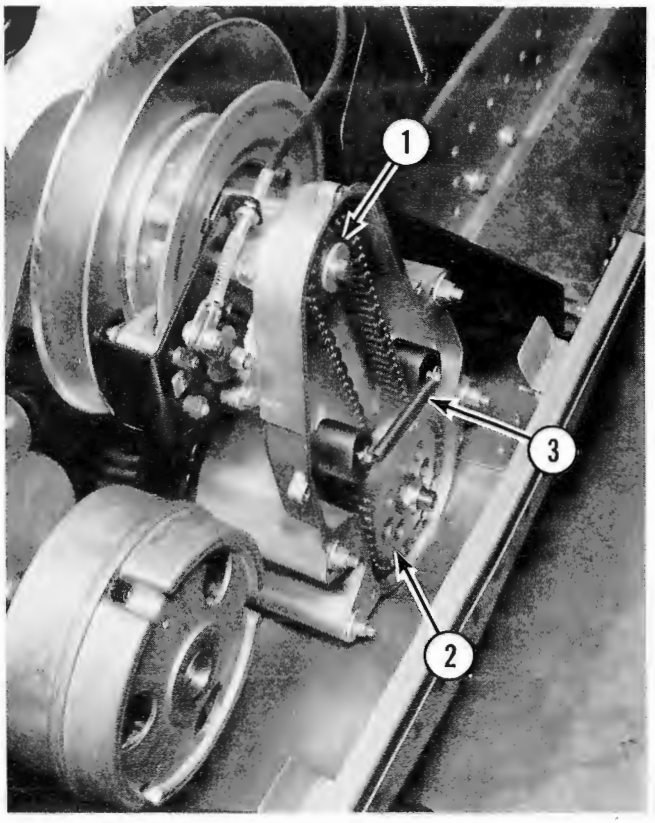

1. Upper Sprocket
2. Lower Sprocket
3. Tensioner Spring

Figure 3-103

Driveshaft and Track

Removal

1. Raise the rear of snowmobile and remove the slide rail suspension.

2. Remove the drive belt.

3. Remove the chaincase cover and drain lubricant into a clean container.

4. Remove the chain tensioner spring, upper and lower sprockets and spacers. (See Figure 3-103.)

5. Remove the right side driveshaft bearing housing.

6. Pull the driveshaft assembly to the right, until it disengages from the chaincase. Carefully lower, and remove driveshaft assembly.

7. Remove the track.

Repair of Driveshaft

1. Inspect the bearing. If bearing has signs of scoring, discoloration, binding, or excessive radial play, it must be replaced. Use a puller to remove the bearing from the shaft. (See Figures 3-104 and 3-105.)

2. Check drive sprockets for excessive wear. Should replacement be necessary, use snap-ring pliers to remove sprocket retaining rings. Support shaft vertically on a wood block and remove sprockets by lightly tapping with a plastic hammer.

3. Slide idler wheels and spacers from the shaft. Inspect the shaft for distortion, bending, and chipped or broken splines. Replace if necessary.

NOTE: When replacing sprockets, index marks (PPD) must be aligned in same position on shaft as shown in Figure 3-106.

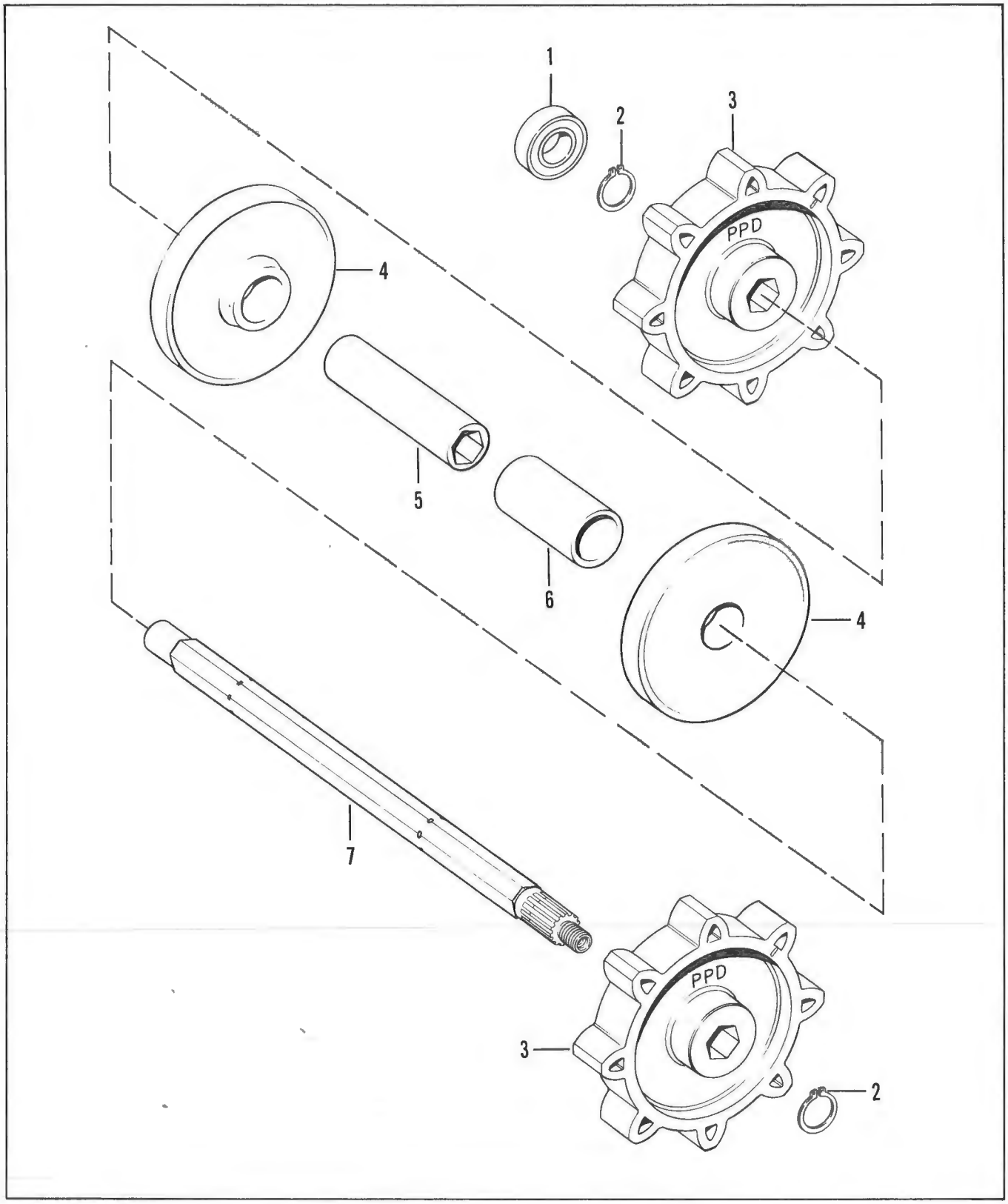

1. Bearing
2. Snap Ring
3. Sprocket
4. Idler Wheel
5. Spacer
6. Spacer
7. Driveshaft

Figure 3-104

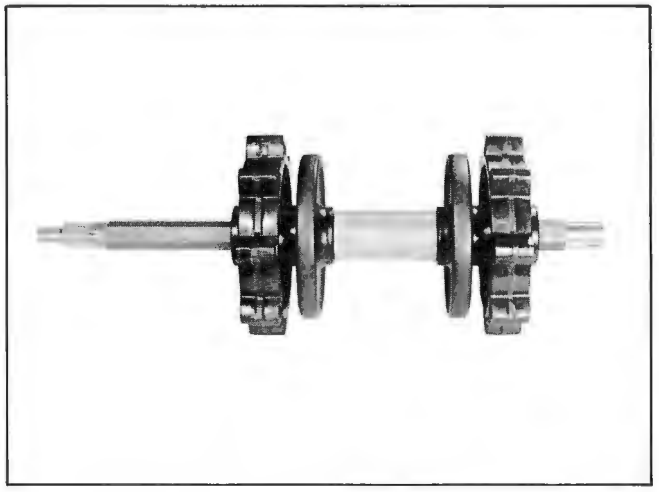

Figure 3-105

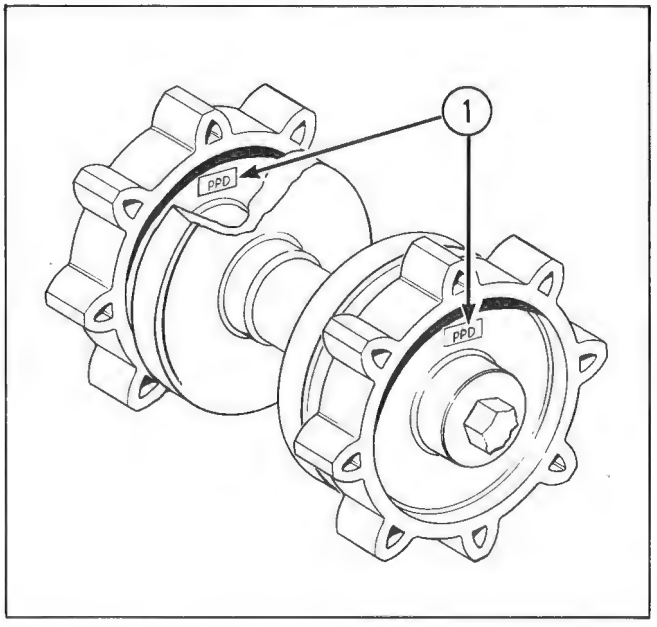

1. Alignment Marks (PPD)

Figure 3-106

Repair of Track

1. Check track for cracks, tears and gouges.

2. Check for broken, worn or missing clips. Remove old clips.

To install new clip, position it on track and compress with track clip tool assembly (tool No. 205088) as shown in Figure 3-107.

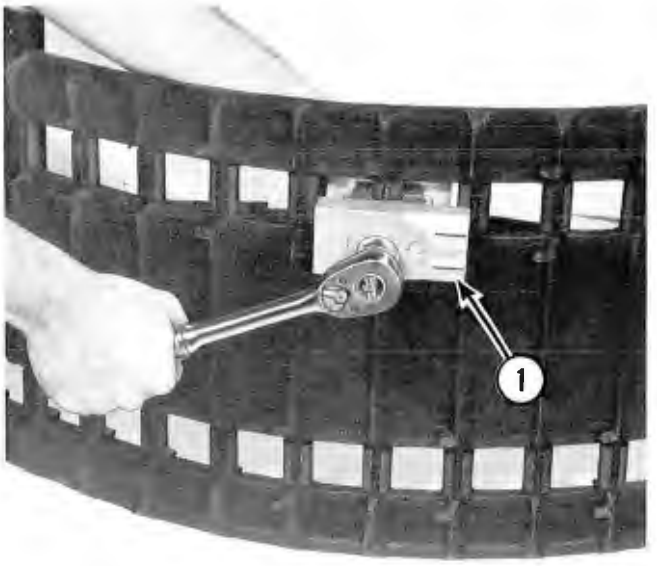

1. Track Clip Tool Assembly

Figure 3-107

Driveshaft and Track Installation

1. Install the track and driveshaft in reverse order of disassembly and removal. Torque the right side driveshaft bearing housing bolts to 95 in. lb (1.09 kg-m).

2. Place bearing-to-sprocket spacers on the shafts. Insert sprockets in chain, and install on shafts, rotate sprockets until they align with shaft splines.

3. Apply Loctite to bolt and nut. Install washers and torque upper sprocket bolt to 28 ft lb (3.871 kg-m), and lower sprocket nut to 55 ft lb (7.604 kg-m).

4. Adjust the track as described in Section 2.

Steering and Skis

Handlebars and Column Removal (See Figure 3-108.)

1. Disconnect electrical connectors from the circuit board so handlebars can be removed.

2. Disconnect the control cables from the handles.

3. Remove four mounting bolts from the handle holder. (See Figure 3-108.) The handlebars can now be removed.

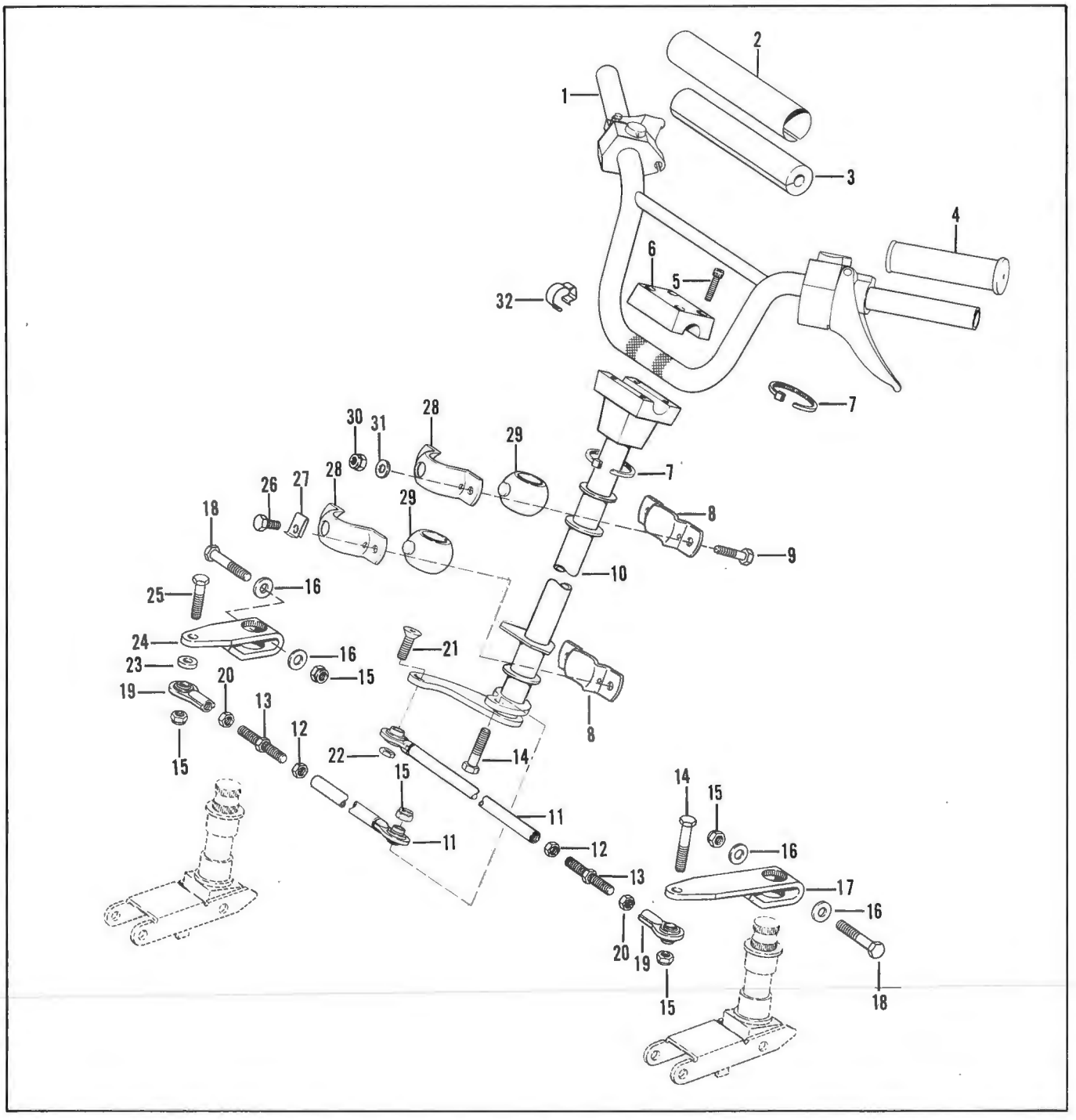

1. Handlebar
2. Cover
3. Foam
4. Grip
5. Bolt
6. Holder
7. Band
8. Bracket
9. Bolt
10. Pole Assembly
11. Rod
12. Nut
13. Stud
14. Bolt
15. Nut
16. Washer
17. Arm
18. Bolt
19. Rod End
20. Nut
21. Screw
22. Nut
23. Spacer
24. Arm
25. Bolt
26. Bolt
27. Washer
28. Bracket
29. Damper
30. Nut
31. Washer
32. Clamp

Figure 3-108

Steering Arms and Skis Removal

1. Scribe an alignment mark on the steering arm and spindle to aid in installation. (See Figure 3-109.)

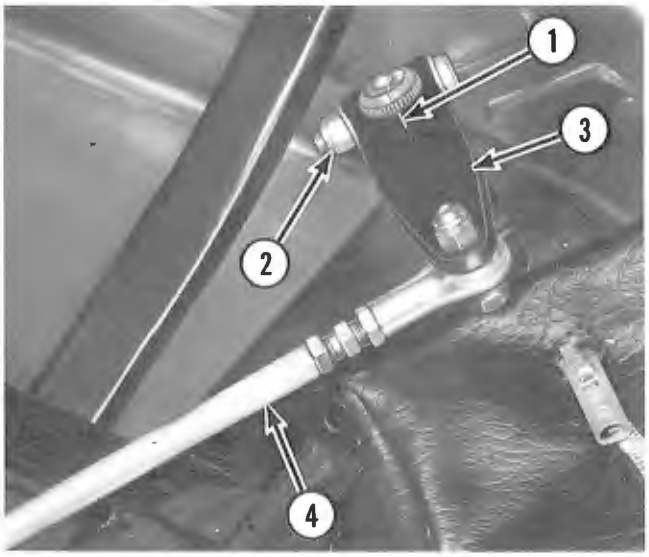

1. Alignment Mark
2. Nut
3. Steering Arm
4. Steering Rod

Figure 3-109

2. Remove the nuts from the steering arm retaining bolts. Do not remove the bolts, until the steering rods are removed.
3. Remove the steering rod bolts and note the numbers and positions of spacers. Rotate the spindle until the steering arm bolt can be removed.
4. Position the snowmobile on its side. Force the spindle from the steering arm by tapping with a soft mallet. (See Figure 3-110.)

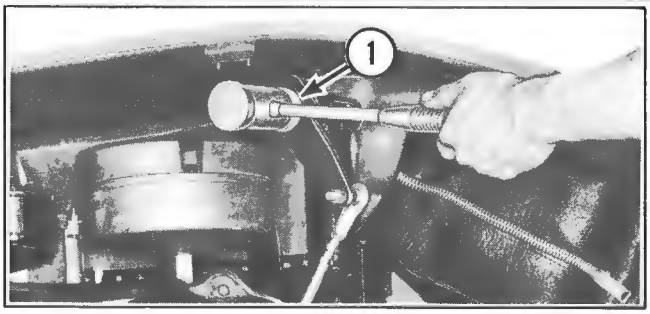

1. Spindle

Figure 3-110

5. Remove the steering rod bolts from the steering arms. Remove the steering arms.
6. Remove one ski spindle bushing from top of snowmobile chassis and one bushing from underneath chassis.

Steering Rods and Steering Column Removal

NOTE: Engine is removed for access.

1. To remove the steering rods, remove screws and nuts which secure the steering rods to the steering column flange.
2. To remove the steering column, remove two bolts which secure it to the weld assembly and two bolts and locknuts which secure it to the steering support assembly.

Repair

1. Clean all steering components thoroughly.
2. Inspect parts for wear and damage. Refer to Figure 3-108 for parts location and identification. Replace parts as required.

Installation

1. Install the steering rods to the steering column and secure with screws and nuts. Tighten nuts to 35 ft lb (4.74 kg-m).
2. Lubricate the steering dampers inner surfaces with silicone grease. Slide the steering column into position. Apply Loctite to bolts and secure the lower steering column bracket with two bolts and washers. Torque bolts to 35 ft lb (4.84 kg-m). Bend tabs on washers to retain the bolts. Secure the upper steering column bracket with two bolts, washers and nuts. Tighten bolts to 10 ft lb (1.38 kg-m).
3. Install the steering arms and secure the steering rods to the steering arms.
4. Apply grease to the bushings and place one on the ski spindle and install spindle in position on the steering arm. Install the remaining bushing. Match alignment marks on ski spindle in disassembly.
5. Install handlebars and secure with four mounting bolts.
6. Attach electrical connectors.

WARNING

Indexing tab on connector must face upward for proper electrical polarity. Improper indexing may damage wiring harness or cause electrical sparks in the engine compartment.

7. Align the skis as described in Section 2. After alignment, check mounting hardware for proper torque.

Repair of the Skis

1. Clean the skis thoroughly to remove dirt and grease. Paint as required to prevent rust.

2. Inspect skis for wear and damage. Refer to Figure 3-111 for parts location and identification.

Skeg Replacement

1. Remove nuts securing skeg to ski and remove skeg.

2. To install skeg, grasp ends of skeg and bend skeg until the studs on skeg are aligned with holes in ski. Insert skeg studs through holes in ski, and secure skeg to ski using nuts previously removed. Tighten nuts to 15 ft lb (2.07 kg-m).

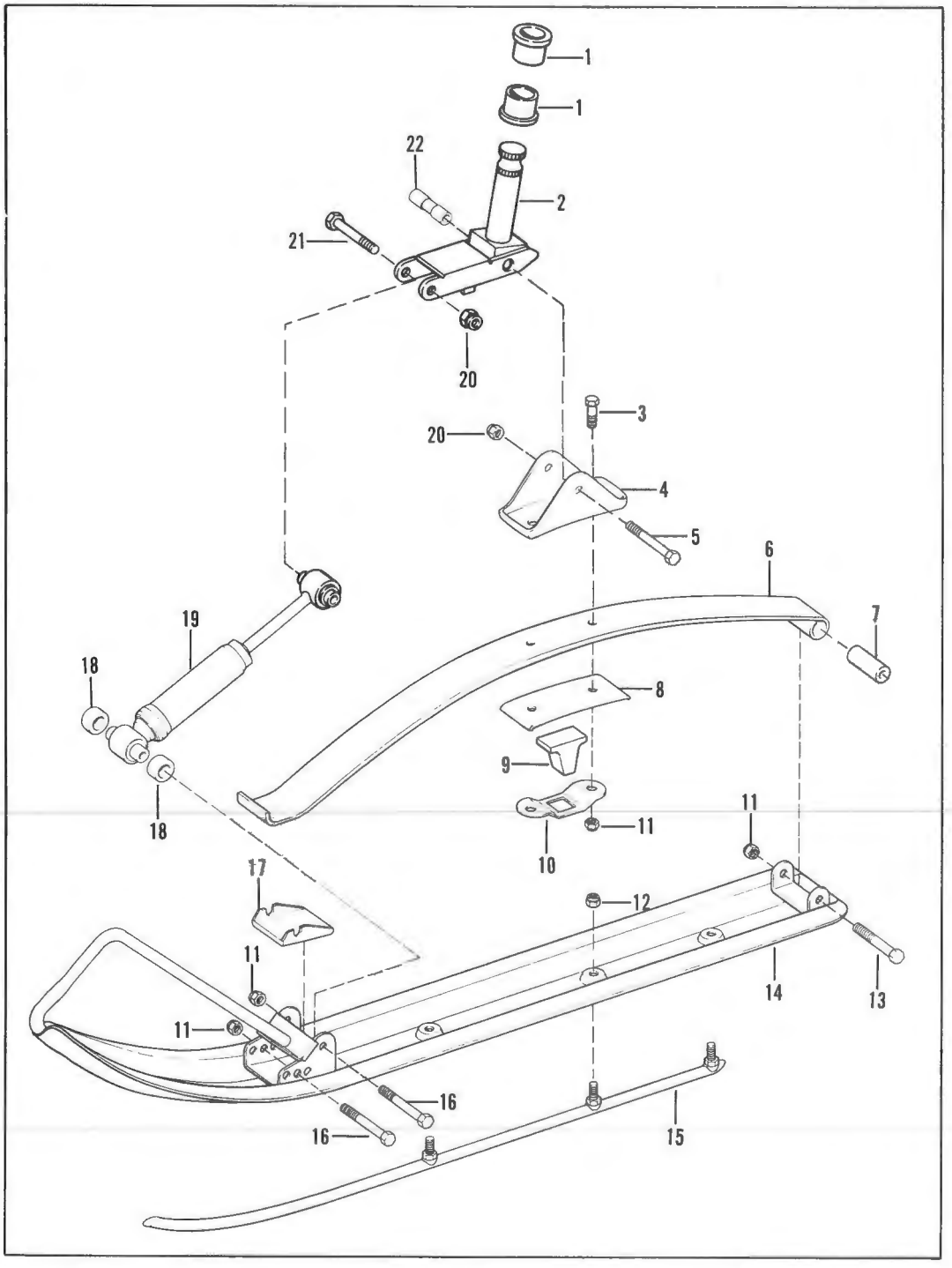

1. Bushing
2. Spindle
3. Bolt
4. Saddle
5. Bolt
6. Spring
7. Sleeve
8. Plate
9. Bumper
10. Retainer
11. Nut
12. Nut
13. Bolt
14. Ski
15. Skeg
16. Bolt
17. Strip
18. Spacer
19. Shock Absorber
20. Nut
21. Bolt
22. Sleeve

Figure 3-111

Ski Spindle Replacement

1. Remove the nut and bolt which secure the spindle to the ski saddle and spindle sleeve. Remove the nut and bolt securing shock absorber in the spindle fork.

2. Remove assembled ski from spindle.

3. Scribe an alignment mark on steering arm, and spindle. Remove nut, bolt, and washers securing the steering arm to the spindle, and remove spindle from the chassis.

4. Clean lubricant and dirt from the spindle shaft and housing with solvent and compressed air. Reinsert spindle in bushings and check for excessive wear. Replace bushings and spindle if worn or damaged.

5. Install spindle and ski, reversing order of removal. Lubricate unthreaded shanks of saddle bolts with low-temperature grease, and torque to 30 ft lb (4.15 kg-m).

NOTE: On some replacement spindles, the spindle may be too wide for the ski saddle. Grind the spindle if necessary for a proper fit.

Ski Spring Replacement

1. Remove the spindle from the ski saddle.

2. Remove the nuts and bolts securing the shock absorbers to the mounting brackets.

3. Place the ski in a vise and compress spring about 1 in. (25.40 mm). Remove the bolts and nuts which secure the front of the spring. Slowly release vise pressure.

CAUTION

When tightening the vise, be sure ski is securely positioned in vise. Spring pressure will tend to force ski to rotate resulting in possible damage.

4. Remove the bolt and nut, and remove the spring.

5. To install the spring, position the end of the spring in the rear ski mounting bracket. Secure with bolt and nut and tighten the nut to 20 ft lb (2.76 kg-m).

NOTE: Install nut on inside of ski.

6. Position the rub strip and front of spring on the front ski mounting bracket.

7. Place the ski in a vise and compress the spring until the bolt and nut can be installed. Tighten nut to 35 ft lb (4.74 kg-m). Remove from vise.

NOTE: Install nut on inside of ski.

8. Install the shock absorber.

9. Install assembled ski to spindle. Torque nut to 35 ft lb (4.84 kg-m).

Seat

Removal

1. Remove the two seat mounting bolts. (See Figure 3-112.)

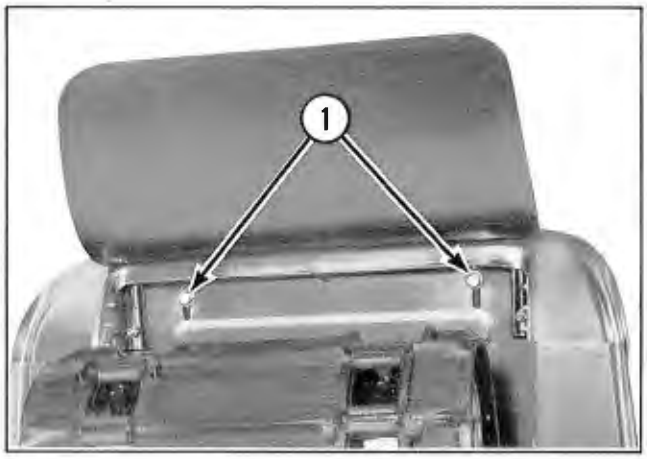

1. Seat Mounting Bolts

Figure 3-112

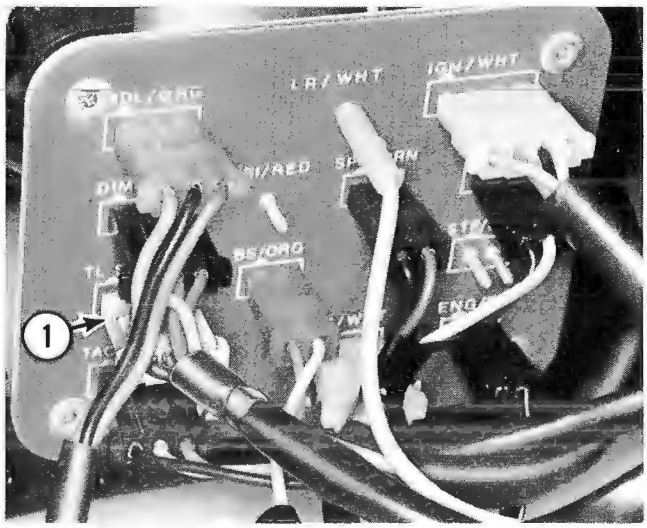

1. Tail and Brake Light Connector

Figure 3-113

2. Unplug the tail and brake light wiring harness from the circuit board. (See Figure 3-113.)

3. Lift the seat from the snowmobile.

Installation

1. Position the seat on the snowmobile.

2. Connect the seat brackets and secure with two seat mounting bolts.

3. Connect the tail and brake light wiring harness to the circuit board. (See Figure 3-113.)

WARNING

Indexing tab on connector must face upward for proper electrical polarity. Improper indexing may damage wiring harness or cause sparks in the engine compartment.

Fuel Tank

Removal

1. Unplug key switch, and remove face nut from enrichener lever.

2. Remove the seat and fuel cap.

3. Remove the six console holddown screws, primer tubes, console, and release the fuel tank holddown spring. (See Figure 3-114.) Slot the hole in the console through which the brake cable passes, to allow removal of the brake cable from the console.

4. Disconnect the fuel line and free the vent tube from the upper steering mount. (See Figure 3-115.)

5. Remove the fuel tank from the snowmobile.

Installation

1. Position the fuel tank in the snowmobile.

2. Connect the fuel line and secure the vent tube in the upper steering mount.

3. Secure the fuel tank holddown spring and connect the primer tubes. Install the console, and secure with six holddown screws.

4. Plug in key switch and reinstall enrichener lever.

5. Install the fuel cap and seat.

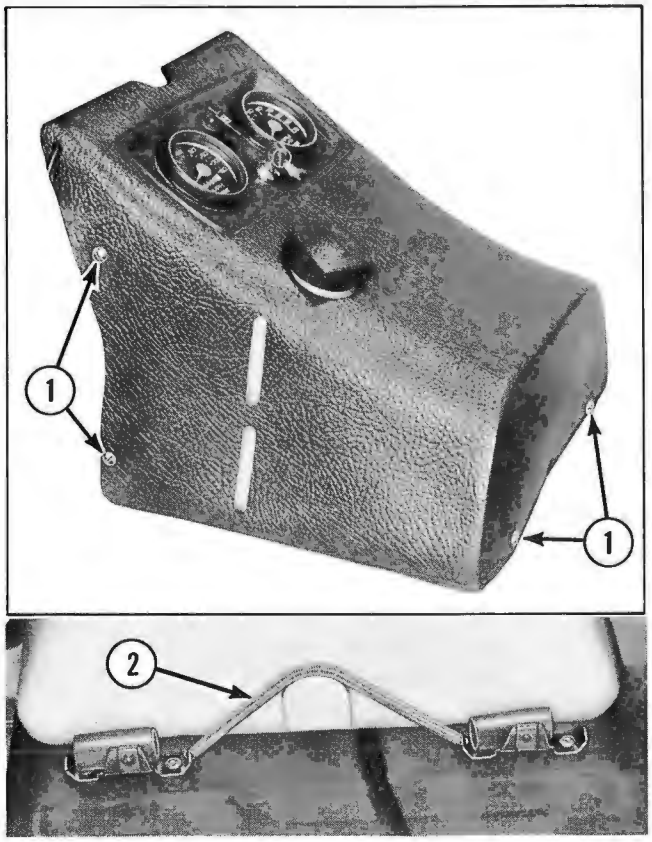

1. Console Holddown Screw
2. Holddown Spring

Figure 3-114

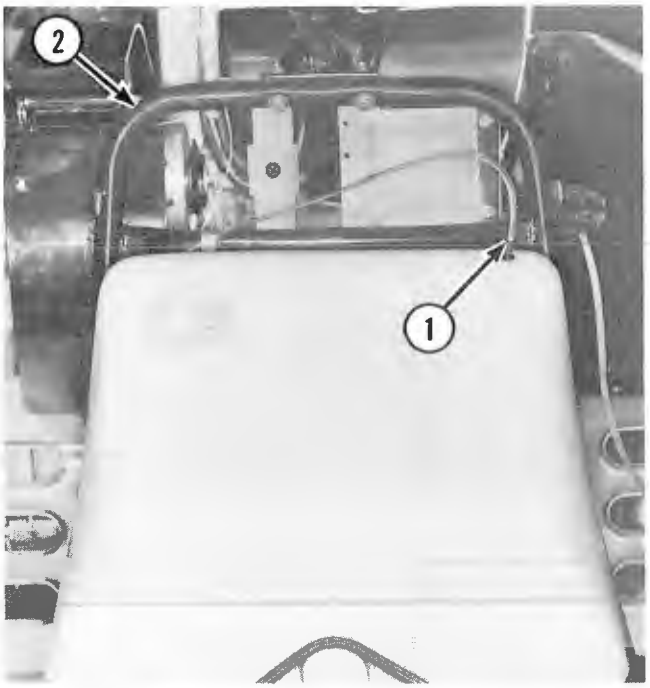

1. Vent Tube
2. Upper Steering Mount

Figure 3-115

Appendix

Table of Contents

4

Fuel and Oil Recommendations

WARNING

Gasoline is extremely flammable and highly explosive under certain condtions. Insure adequate ventilation when fueling the snowmobile and never smoke or allow sparks or open flame near fuel system.

Your Kawasaki Snowmobile uses a two cycle engine which means oil must be mixed with the gasoline to provide proper internal engine lubrication and cooling.

Oil

We recommend using Kawasaki Snowmobile Oil in an emergency use a B.I.A. certified T.C.W. (Two Cycle) oil. These oils are specially formulated to give minimum piston ring varnish and combustion chamber deposits along with excellent lubrication qualities. (See Figure 4-1.)

Figure 4-1

The use of fuel additives such as tune-up tonics and super oils are NOT RECOMMENDED.

Fuel

Use regular leaded gasoline with a minimum PUMP POST OCTANE NUMBER of 89.

Fuel/Oil Mxture (Ratio)

The fuel-to-oil ratio required is 25 to 1 (25 parts gasoline to 1 part oil). Or, simply stated, 1 quart oil (0.946 liters) to 6.25 gallons gasoline (23.6 liters).

WARNING

Gasoline fumes are heavier than air and can become explosive if exposed to a pilot light from a furnace, hot water heater, etc. Mix fuel or fill the fuel tank only in an area that is well ventilated and free from pilot lights and sparks.

Mixing Fuel/Oil

Always use a clean separate container to mix fuel. Put 2.5 to 3 gallons (11 liters) of gasoline into container. Add 1 quart (0.946 liters) oil and shake the container from side to side. Add the remainder of the gasoline to the container and shake well. (See Figure 4-2.)

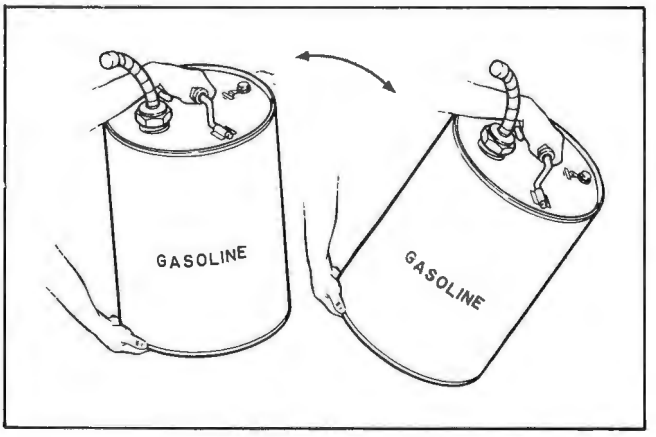

Figure 4-2

CAUTION

Fuel and oil MUST be PROPERLY MIXED or damage to the engine will result.

Before removing filler cap from the fuel tank, remove any ice, snow, or water from around the fuel tank opening to prevent contamination of fresh fuel mixture.

Fill the fuel tank slowly and pour the fuel into the tank using a funnel with a fine mesh screen.

Break-in Procedure

During the first 10 hours of operation, Do not subject the snowmobile engine to continued full speed, do not ride with passengers in deep snow, and do not break trail.

For proper engine break-in, run machine on hard packed snow at approximatey 3/8 to 1/2 throttle, with occasional bursts to full speed. Limit the full speed operation to 1-1/2 to 2 minutes then return to cruising speed for 10 to 15 minute interval. After 10 hours of operation, or 2 tanks of gasoline are used, break-in is complete.

Conversion Chart / Fraction Inch to Decimal Inch to mm

Frac. Inch	Dec. Inch	mm.	Frac. Inch	Dec. Inch	mm.	Frac. Inch	Dec. Inch	mm.	Frac. Inch	Dec. Inch	mm.
	.000400	.0100	13/32	.406250	10.3187		.984259	25.0000		1.800000	45.7196
	.000800	.0200	27/64	.421875	10.7156	63/64	.984375	25.0031		1.811037	46.0000
	.001200	.0300		.433074	11.0000	1	1.000000	25.4001	1-13/16	1.812500	46.0376
	.001600	.0400	7/16	.437500	11.1125		1.023629	26.0000	1-27/32	1.843750	46.8313
	.002000	.0500		.450000	11.4300	1-1/32	1.031250	26.1938		1.850000	46.9896
	.002400	0600	29/64	.453125	11.5094		1.050000	26.6699		1.850407	47.0000
	.002800	.0700	15/32	.468750	11.9062	1-1/16	1.062500	26.9876	1-7/8	1.875000	47.6251
	.003100	.0800		.472444	12.0000		1.062999	27.0000		1.889777	48.0000
	.003500	.0900	31/64	.484375	12.3031	1-3/32	1.093750	27.7813		1.900000	48.2596
	.003900	.1000	1/2	.500000	12.7000		1.100000	27.9397	1-29/32	1.906250	48.4188
1/128	.007900	.2000		.511814	13.0000		1.102369	28.0000		1.929147	49.0000
	.011800	.3000	33/64	.515625	13.0969	1-1/8	1.125000	28.5751	1-15/16	1.937500	49.2126
1/64	.015625	.3969	17/32	.531250	13.4937		1.141739	29.0000		1.950000	49.5296
	.015700	.4000	35/64	.546875	13.8906		1.150000	29.2097		1.968522	50.0000
	.019700	.5000		.550000	13.9700	1-5/32	1.156250	29.3688	1-31/32	1.968750	50.0063
	.023600	.6000		.551184	14.0000		1.181113	30.0000	2	2.000000	50.8001
	.027600	.7000	9/16	.562500	14.2875	1-3/16	1.187500	30.1626		2.007892	51.0000
1/32	.031250	.7937	37/64	.578125	14.6844		1.200000	30.4797	2-1/32	2.031250	51.5939
	.031500	.8000		.590554	15.0000	1-7/32	1.218750	30.9563		2.047262	52.0000
	.035400	.9000	19/32	.593750	15.0812		1.220483	31.0000		2.050000	52.0695
	.039370	1.0000		.600000	15.2400	1-1/4	1.250000	31.7501	2-1/16	2.062500	52.3876
3/64	.046875	1.1906	39/64	.609375	15.4781		1.259853	32.0000		2.086632	53.0000
	.050000	1.2700	5/8	.625000	15.8750	1-9/32	1.281250	32.5438	2-3/32	2.093750	53.1814
1/16	.062500	1.5875		.629924	16.0000		1.299223	33.0000		2.100000	53.3395
5/64	.078125	1.9844	41/64	.640625	16.2719		1.300000	33.0197	2-1/8	2.125000	53.9751
	.078740	2.0000		.650000	16.5100	1-5/16	1.312500	33.3376		2.126002	54.0000
3/32	.093750	2.3812	21/32	.656250	16.6687		1.338593	34.0000		2.150000	54.6095
	.100000	2.5400		.669294	17.0000	1-11/32	1.343750	34.1313	2-5/32	2.156250	54.7688
7/64	.109375	2.7781	43/64	.671875	17.0656		1.350000	39.2897		2.165372	55.0000
	.118110	3.0000	11/64	.687500	17.4625	1-3/8	1.375000	34.9251	2-3/16	2.187500	55.5626
1/8	.125000	3.1750		.700000	17.7800		1.377963	35.0000		2.200000	55.8795
9/64	.140625	3.5719	45/64	.703125	17.8594		1.400000	35.5597		2.204712	56.0000
	.150000	3.8100		.708664	18.0000	1-13/32	1.406250	35.7188	2-7/32	2.218750	56.3564
5/32	.156250	3.9687	23/32	.718750	18.2562		1.417333	36.0000		2.244112	57.0000
	.157418	4.0000	47/64	.734375	18.6531	1-7/16	1.437500	36.5126	2-1/4	2.250000	57.1501
11/64	.171875	4.3656		.748034	19.0000		1.450000	36.8297	2-9/32	2.281250	57.9439
3/16	.187500	4.7625	3/4	.750000	19.0500		1.456703	37.0000		2.283482	58.0000
	.196850	5.0000	49/64	.765625	19.4469	1-15/32	1.468750	37.3063		2.300000	58.4195
	.200000	5.0800	25/32	.781250	19.8437		1.496073	38.0000	2-5/16	2.312500	58.7376
13/64	.203125	5.1594		.787409	20.0000	1-1/2	1.500000	38.1001		2.322852	59.0000
7/32	.218750	5.5562	51/64	.796875	20.2406	1-17/32	1.531250	38.8938	2-11/32	2.343750	59.5314
15/64	.234375	5.9531		800000	20.3200		1.535443	39.0000		2.350000	59.6895
	.236220	6.0000	13/16	.812500	20.6375		1.550000	39.3696		2.362226	60.0000
1/4	.250000	6.3500		.826779	21.0000	1-9/16	1.562500	39.6876	2-3/8	2.375000	60.3251
17/64	.265625	6.7469	53/64	.828125	21.0344		1.574817	40.0000		2.400000	60.9594
	.275590	7.0000	27/32	.843750	21.4312	1-19/32	1.593750	40.4813		2.401596	61.0000
9/32	.281250	7.1437		.850000	21.5900		1.600000	40.6396	2-13/32	2.406250	61.1189
19/64	.296875	7.5406	55/64	.859375	21.8281		1.614187	41.0000	2-7/16	2.437500	61.9126
	.300000	7.6200		.866149	22.0000	1-5/8	1.625000	41.2751		2.440966	62.0000
5/16	.312500	7.9375	7/8	.875000	22.2250		1.650000	41.9096		2.450000	62.2294
	.314960	8.0000	57/64	.890625	22.6219		1.653557	42.0000	2-15/32	2.468750	62.7064
21/64	.328125	8.3344		.900000	22.8600	1-21/32	1.656250	42.0688		2.480336	63.0000
11/32	.343750	8.7312		.905519	23.0000	1-11/16	1.687500	42.8626	2-1/2	2.500000	63.5001
	.350000	8.8900	29/32	.906250	23.0187		1.692927	43.0000		2.519706	64.0000
	.354330	9.0000	59/64	.921875	23.4156		1.700000	43.1796	2 17/32	2.531250	64.2939
23/64	.359375	9.1281	15/16	.937500	23.8125	1-23/32	1.718750	43.6563		2.550000	64.7694
3/8	.375000	9.5250		.944889	24.0000		1.732297	44.0000		2.559076	65.0000
25/64	.390625	9.9219		.950000	24.1300	1-3/4	1.750000	44.4501	2-9/16	2.562500	65.0876
	.393704	10.0000	61/64	.953125	24.2094		1.771667	45.0000	2-19/32	2.593750	65.8814
	.400000	10.1600	31/32	.968750	24.6062	1-25/32	1.781250	45.2438		2.598446	66.0000

Frac. Inch	Dec. Inch	mm.	Frac. Inch	Dec. Inch	mm.	Frac. Inch	Dec. Inch	mm.	Frac. Inch	Dec. Inch	mm.
	2.600000	66.0394		2.952780	75.0000	3-5/16	3.312500	84.1377		3.661449	93.0000
2-5/8	2.625000	66.6751	2-31/32	2.968750	75.4064	3-11/32	3.343750	84.9314	3-11/16	3.687500	93.6627
	2.637816	67.0000		2.992150	76.0000		3.346485	85.0000		3.700000	93.9792
	2.650000	67.3094	3	3.000000	76.2002		3.350000	85.0892		3.700819	94.0000
2-21/32	2.656250	67.4689	3-1/32	3.031250	76.9939	3-3/8	3.375000	85.7252	3-23/32	3.718750	94.4564
	2.677186	68.0000		3.031520	77.0000		3.385855	86.0000		3.740189	95.0000
2-11/16	2.687500	68.2626		3.050000	77.4693		3.400000	86.3592	3-3/4	3.750000	95.2502
	2.700000	68.5794	3-1/16	3.062500	77.7877	3-13/32	3.406250	86.5189		3.779559	96.0000
	2.716556	69.0000		3.070890	78.0000		3.425225	87.0000	3-25/32	3.781250	96.0439
2-23/32	2.718750	69.0564	3-3/32	3.093750	78.5814	3-7/16	3.437500	87.3127		3.800000	96.5192
2-3/4	2.750000	69.8501		3.100000	78.7393		3.450000	87.6292	3-13/16	3.812500	96.8377
	2.755930	70.0000		3.110260	79.0000		3.464595	88.0000		3.818929	97.0000
2-25/32	2.781250	70.6439	3-1/8	3.125000	79.3752	3-15/32	3.468750	88.1064	3-27/32	3.843750	97.6314
	2.795300	71.0000		3.149635	80.0000	3-1/2	3.500000	88.9002		3.850000	97.7891
	2.800000	71.1194		3.150000	80.0093		3.503965	89.0000		3.858299	98.0000
2-13/16	2.812500	71.4376	3-5/32	3.156250	80.1689	3-17/32	3.531250	89.6939	3-7/8	3.875000	98.4252
	2.834670	72.0000	3-3/16	3.187500	80.9627		3.543339	90.0000		3.897669	99.0000
2-27/32	2.843750	72.2314		3.189005	81.0000		3.550000	90.1691		3.900000	00.0591
	2.850000	72.3893		3.200000	81.2793	3-9/16	3.562500	90.4877	3-29/32	3.906250	99.2189
	2.874040	73.0000	3-7/32	3.218750	81.7564		3.582709	91.0000		3.937043	100.0000
2-7/8	2.875000	73.0251		3.228375	82.0000	3-19/32	3.593750	91.2814	3-15/16	3.937500	100.0130
	2.900000	73.6593	3-1/4	3.250000	82.5502		3.600000	91.4392		3.950000	100.3291
2-29/32	2.906250	73.8189		3.267745	83.0000		3.622079	92.0000	3-31/32	3.968750	100.8060
	2.913410	74.0000	3-9/32	3.281250	83.3439	3-5/8	3.625000	92.0752		3.976413	101.0000
2-15/16	2.937500	74.6126		3.300000	83.8192		3.650000	92.7092	4	4.000000	101.6000
	2.950000	74.9293		3.307115	84.0000	3-21/32	3.656250	92.8639			

Drill Sizes/Inch Decimal Equivalent

80	.0135	61	.039	42	.0935	23	.154	4	.209		
79	.0145	60	.040	41	.096	22	.157	3	.213		
78	.016	59	.041	40	.098	21	.159	2	.221		
77	.018	58	.042	39	.0995	20	.161	1	.228	O	.316
76	.020	57	.043	38	.1015	19	.166			P	.323
75	.021	56	.0465	37	.104	18	.1695	A	.234	Q	.332
74	.0225	55	.052	36	.1065	17	.173	B	.238	R	.339
73	.024	54	.055	35	.110	16	.177	C	.242	S	.348
72	.025	53	.0595	34	.111	15	.180	D	.246	T	.358
71	.026	52	.0635	33	.113	14	.182	E	.250	U	.368
70	.028	51	.067	32	.116	13	.185	F	.257	V	.377
69	.02925	50	.070	31	.120	12	.189	G	.261	W	.386
68	.031	49	.073	30	.1285	11	.191	H	.266	X	.397
67	.032	48	.076	29	.136	10	.1935	I	.272	Y	.404
66	.033	47	.0785	28	.1405	9	.196	J	.277	Z	.413
65	.035	46	.081	27	.144	8	.199	K	.281		
64	.036	45	.082	26	.147	7	.201	L	.290		
63	.037	44	.086	25	.1495	6	.204	M	.295		
62	.038	43	.089	24	.152	5	.2055	N	.302		

English to Metric Conversions

METRIC EQUIVALENTS

m indicates one meter
cm indicates one hundredth of a meter
mm indicates one thousandth of a meter
km indicates one thousand meters

LENGTH

1 mm. = 0.03937 In.
Cm. = 0.3937 In.
Meter = 3.28 Ft.
Meter = 1.094 Yd. (39.37 In.)
Kilom. = 0.621 Mile

In. = 2.54 Cm.
Ft. = 0.3048 Meter
Yd. = 0.9144 Meter
Mile = 1.61 Kilom.

AREA

Sq. Cm. = 0.1550 Sq. In.
Sq. M. = 10.76 Sq. Ft.

Sq. In. = 6.45 Sq. Cm.
Sq. Ft. = 0.0929 Sq. M.

VOLUME

Cu. Cm. = 0.061 Cu. In.
Cu. M. = 35.315 Cu. Ft.

Cu. In. = 16.38 Cu. Cm.
Cu. Ft. = 0.028 Cu. M.

CAPACITY

Liter = 0.0353 Cu. Ft.
Liter = 0.2642 Gallons (U.S.)
Liter = 61.023 Cu. In.
Liter = 2.202 lb. of fresh water at 62°F.
Liter = 1,000 CC
Liter = 35.19 Fl. Oz. (Imp.)
Liter = 33.82 Fl. Oz. (U.S.)

Gal. (U.S.) = 3.785 Liters
Gal. (Imp.) = 4.546 Liters
Cu. Ft. = 28.32 Liters
Cu. In. = 0.0164 Liter
Fl. Oz. (U.S.) = 29.57 CC
Fl. Oz. (Imp.) = 28.41 CC

WEIGHT

Gram = 15.432 Grains
Gram = 0.0353 Oz.

Kilogram = 2.2046 lbs.
Kilogram = 0.0011 Ton (Sht)
Met. Ton = 1.1025 Ton (Sht)
Grain = 0.0648 Gram

Oz. = 28.35 Gram
Lb. = 0.454 Kilgm.
Ton (Sht) = 907.18 Kilgm.
Ton (Sht) = 0.907 Metric Ton
Ton (Sht) = 2000 lb.

PRESSURE

1 Kilogram per Sq. Cm. = 14.2233 Lbs. per Sq. In.
1 Lb. per Sq. In. = 0.070307 Kilgms. per Sq. Cm.
1 Kilogram per Sq. Meter = 0.20482 Lbs. per Sq. Ft.
1 Lb. per Sq. Ft. = 4.8824 Kilgms. per Sq. Meter
1 Kilgm. per Sq. Cm. = 0.96784 Standard Atmosphere
1 Standard Atmosphere = 1.033228 Kilgm. per Sq. Cm.
1 Metric Atmosphere = 1.033228 Kilgm. per Sq. Cm.
1 Std. Atmosphere = 4.6959 Lbs. per Sq. In.

CONVERSION TABLES

	GALLON	QUART	PINT	LITER
U.S.	1	= 4	= 8	= 3.785
	1/4	= 1	= 2	= 0.946
	1/8	= 1/2	= 1	= 0.473
	0.264	= 1.056	= 2.113	= 1
IMP.	1	= 4	= 8	= 4.546
	1/4	= 1	= 2	= 1.136
	1/8	= 1/2	= 1	= 0.568
	0.220	= 0.880	= 1.760	= 1

U.S.
1 Gallon = 128 oz. = 3,785.41 cc 1 Quart = 32 oz. = 946.35 cc 1 Pint = 16 oz. = 473.18 cc
IMP.
1 Gallon = 160 oz. = 4,546.09 cc 1 Quart = 40 oz. = 1,136.52 cc 1 Pint = 20 oz. = 568.26 cc

CONVERSION FACTORS

Inches to centimeters (cm) ..... Multiply by 2.54
Meters (m) to yards ..... Multiply by 70 and divide by 64
Kilometers (km) to miles ..... Multiply by 5 and divide by 8
Cubic inches to cubic centimeters ..... Multiply by 16.39
Grams to ounces ..... Multiply by 567 and divide by 20
Liters to U.S. pints ..... Multiply by 95 and divide by 20
Degrees Centigrade to degrees Fahrenheit ..... Multiply by 9, divide by 5 and add 32
Degrees Fahrenheit to degrees Centigrade ..... Subtract 32, multiply by 5 and divide by 9

Unit Conversion Table

cc	x	.0610	=	cu.in.
cc	x	.03519	=	fl.oz. (imp.)
cc	x	.03381	=	fl.oz. (U.S.)
cu. in.	x	16.39	=	cc
fl. oz.(imp.)	x	28.41	=	cc
fl. oz.(U.S.)	x	29.57	=	cc
ft-lbs	x	12	=	in-lbs
ft-lbs	x	.1383	=	kg-m
gal. (imp.)	x	4.546	=	liters
gal. (imp.)	x	1.201	=	gal. (U.S.)
gal. (U.S.)	x	3.7853	=	liters
gal. (U.S.)	x	.8326	=	gal. (imp.)
grams	x	.03527	=	oz.
in.	x	25.40	=	mm
in-lbs	x	.0833	=	ft-lbs
in-lbs	x	.0115	=	kg-m
kg	x	2.2046	=	lb.
kg	x	35.274	=	oz.
kg-m	x	7.233	=	ft-lbs
kg-m	x	86.796	=	in-lbs
kg/cm^2	x	14.22	=	lbs/sq.in.
km	x	.6214	=	miles
lb.	x	.4536	=	kg
lb/sq. in.	x	.0703	=	kg/cm^2
liter	x	35.19	=	fl.oz. (imp.)
liter	x	33.81	=	fl.oz. (U.S.)
liter	x	.8799	=	qt. (imp.)
liter	x	1.0567	=	qt. (U.S.)
meter	x	3.281	=	ft.
mile	x	1.6093	=	km
mm	x	.03937	=	in.
oz.	x	28.35	=	grams
qt. (imp.)	x	1.1365	=	liters
qt. (imp.)	x	1.201	=	qt. (U.S.)
qt. (U.S.)	x	.9463	=	liters
qt. (U.S.)	x	.8326	=	qt. (imp.)
fl. oz. (U.S.)	x	1.04	=	fl. oz. (imp.)

List of Abbreviations

ABDC	after bottom dead center
ATDC	after top dead center
BBDC	before bottom dead center
BDC	bottom dead center
BTDC	before top dead center
cc	cubic centimeters
cu. in.	cubic inches
fl. oz.	fluid ounces
ft.	foot, feet
ft-lbs	foot-pounds
gal.	gallon, gallons
hp	horsepower
in.	inch, inches
in-lbs	inch-pounds
kg	kilogram, kilograms
kg/cm^2	kilograms per square centimeter
kg-m	kilogram-meters
km	kilometer
kph	kilometers per hour
lb., lbs.	pound, pounds
lbs/sq.in.	pounds per square inch
ℓ	liter
m	meter, meters
mi.	mile, miles
mm	millimeters
mph	miles per hour
oz.	ounce, ounces
psi	pounds per square inch
qt.	quart, quarts
r.p.m.	revolutions per minute
sec.	second, seconds
SS	standing start
TDC	top dead center
"	inch, inches

Special Service Tools

Part No. 205207 Converter Alignment Gauge

Part No. 205196 Drive Converter Puller

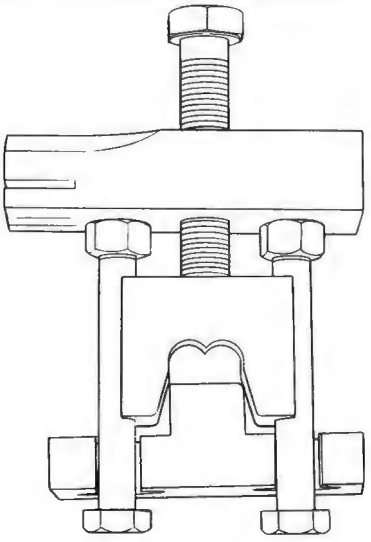

Part No. 205088 Track Clip Tool Assembly

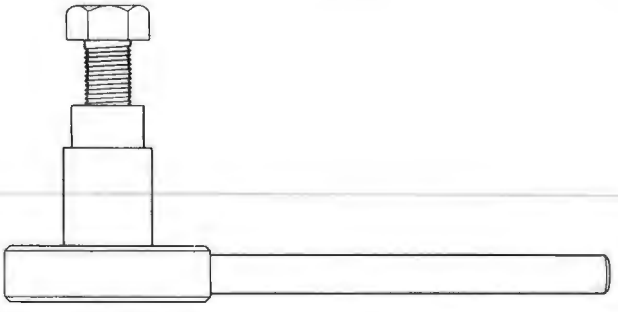

Part No. T56019-011 Flywheel Puller

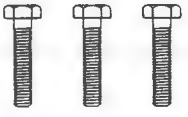

Part No. 110G0630
Flywheel Puller Bolt

Part No. 20508 Fan Pulley Holder

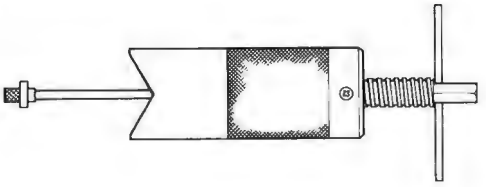

Part No. 57001-910 Piston Pin Puller

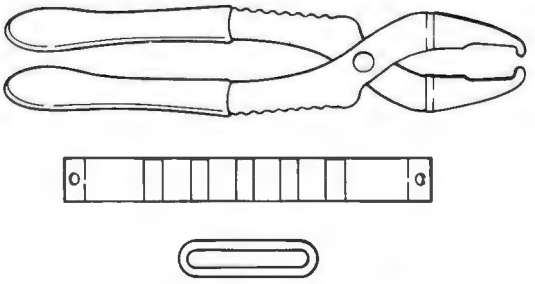

Part No. T57001-130
Piston Ring Compressor Set

Part No. 92104-002 Liquid Gasket Sealer

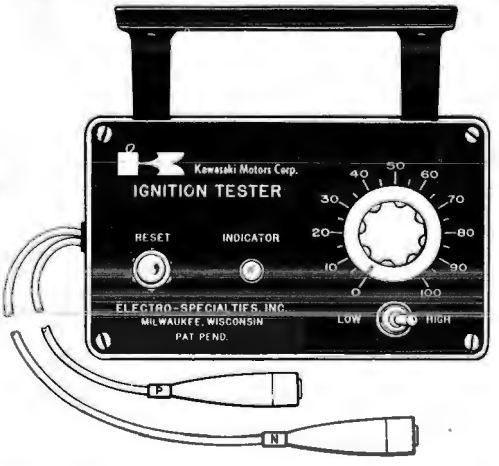

Part No. T56019-201 CD Ignition Tester

Wiring Diagram

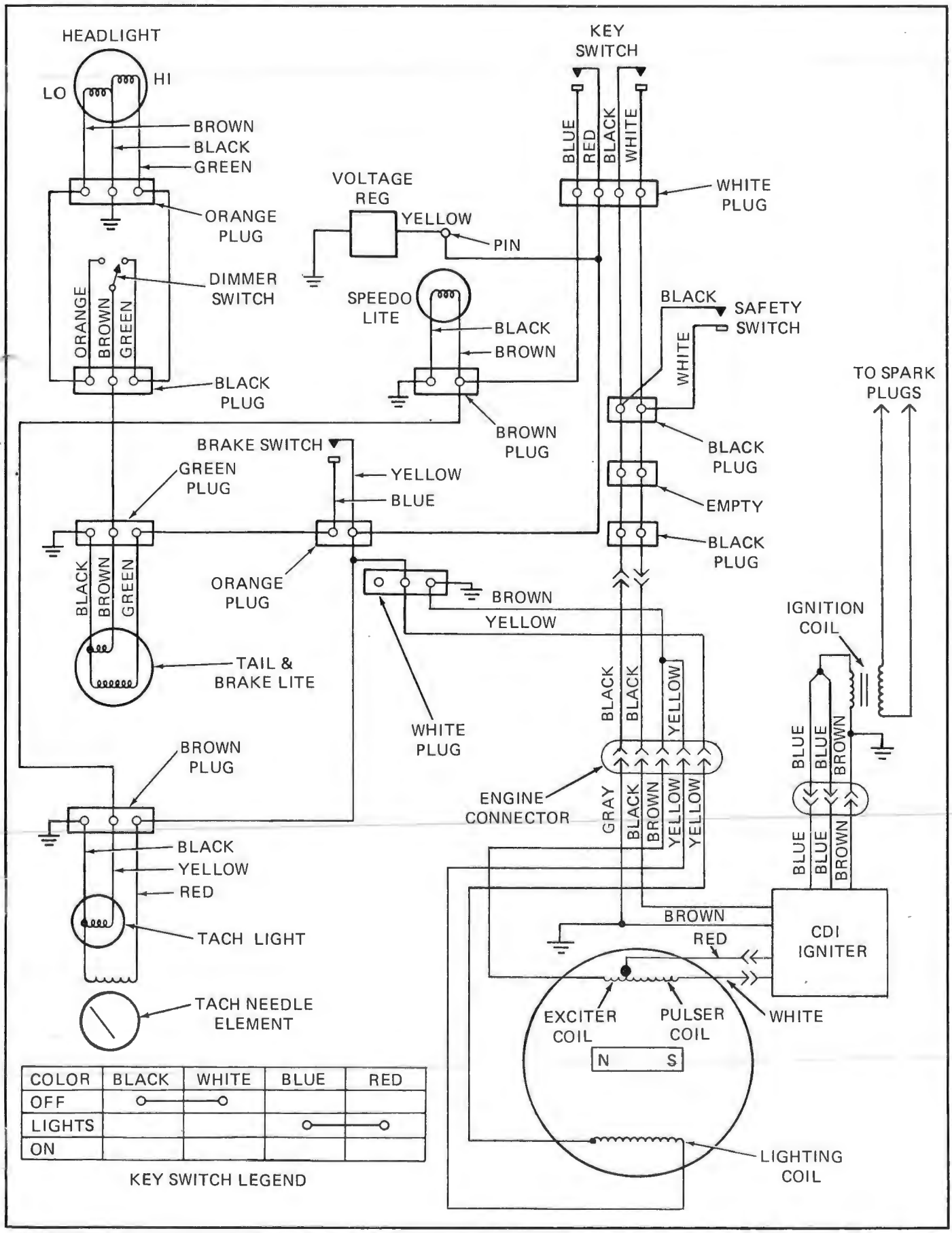

COLOR	BLACK	WHITE	BLUE	RED
OFF	○	○		
LIGHTS			○	○
ON				

KEY SWITCH LEGEND

Index